P61.12

ENS LYON

DC Programmable Electronic Loads

IT8500G+ Series User Manual

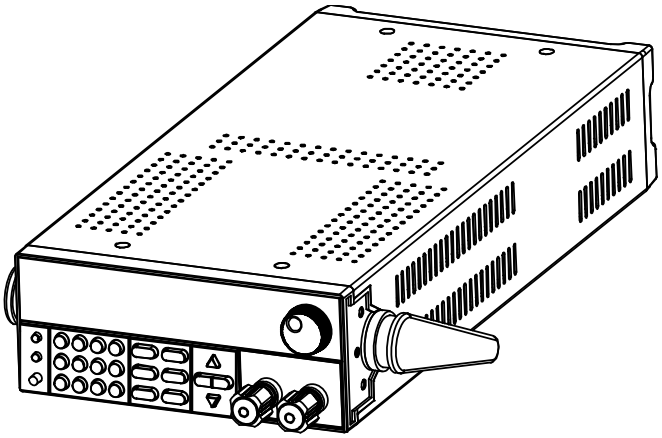

Model: IT8511G+/IT8512G+/IT8512BG+
/IT8513G+/IT8513BG+/IT8513CG+
Version:3.1

Notices

© Itech Electronic, Co., Ltd. 2023

No part of this manual may be reproduced in any form or by any means (including electronic storage and retrieval or translation into a foreign language) without prior permission and written consent from Itech Electronic, Co., Ltd. as governed by international copyright laws.

Manual Part Number

IT8500G+-402225

Revision

Third Edition: Feb 2th,2023

Itech Electronic, Co., Ltd.

Trademarks

Pentium is U.S. registered trademarks of Intel Corporation.

Microsoft, Visual Studio, Windows and MS Windows are registered trademarks of Microsoft Corporation in the United States and/or other countries and regions.

Warranty

The materials contained in this document are provided “as is”, and is subject to change, without prior notice, in future editions. Further, to the maximum extent permitted by applicable laws, ITECH disclaims all warrants, either express or implied, with regard to this manual and any information contained herein, including but not limited to the implied warranties of merchantability and fitness for a particular purpose. ITECH shall not be held liable for errors or for incidental or indirect damages in connection with the furnishing, use or application of this document or of any information contained herein. Should ITECH and the user enter into a separate written agreement with warranty terms covering the materials in this document that conflict with these terms, the warranty terms in the separate agreement shall prevail.

Technology Licenses

The hardware and/or software described herein are furnished under a license and may be used or copied only in accordance with the terms of such license.

Restricted Rights Legend

Restricted permissions of the U.S. government. Permissions for software and technical data which are authorized to the U.S. Government only include those for custom provision to end users. ITECH follows FAR 12.211 (technical data), 12.212 (computer software). DFARS 252.227-7015 (technical data--commercial products) for national defense and DFARS 227.7202-3 (permissions for commercial computer software or computer software documents) while providing the customized business licenses of software and technical data.

Safety Notices

CAUTION

A CAUTION sign denotes a hazard. It calls attention to an operating procedure or practice that, if not correctly performed or adhered to, could result in damage to the product or loss of important data. Do not proceed beyond a CAUTION sign until the indicated conditions are fully understood and met.

WARNING

A WARNING sign denotes a hazard. It calls attention to an operating procedure or practice that, if not correctly performed or adhered to, could result in personal injury or death. Do not proceed beyond a WARNING sign until the indicated conditions are fully understood and met.



NOTE

A NOTE sign denotes important hint. It calls attention to tips or supplementary information that is essential for users to refer to.

Quality Certification and Assurance

We certify that series IT8500G+ electronic load meets all the published specifications at time of shipment from the factory.

Warranty

ITECH warrants that the product will be free from defects in material and workmanship under normal use for a period of one (1) year from the date of delivery (except those described in the Limitation of Warranty below).

For warranty service or repair, the product must be returned to a service center designated by ITECH.

- The product returned to ITECH for warranty service must be shipped PREPAID. And ITECH will pay for return of the product to customer.
- If the product is returned to ITECH for warranty service from overseas, all the freights, duties and other taxes shall be on the account of customer.

Limitation of Warranty

This Warranty will be rendered invalid in case of the following:

- Damage caused by circuit installed by customer or using customer own products or accessories;
- Modified or repaired by customer without authorization;
- Damage caused by circuit installed by customer or not operating our products under designated environment;
- The product model or serial number is altered, deleted, removed or made illegible by customer;
- Damaged as a result of accidents, including but not limited to lightning, moisture, fire, improper use or negligence.

Safety Symbols

⎓	Direct current	|	ON (power on)
~	Alternating current	○	OFF (power off)
⎓ ~	Both direct and alternating current	⎍	Power-on state
⏚	Protective conductor terminal	⎍	Power-off state
⏚	Earth (ground) terminal	±	Reference terminal
⚠	Caution, risk of electric shock	+	Positive terminal
⚠	Warning, risk of danger (refer to this manual for specific Warning or Caution information)	−	Negative terminal

Copyright © Itech Electronic Co., Ltd.

	Frame or chassis terminal	-	-

Safety Precautions

The following safety precautions must be observed during all phases of operation of this instrument. Failure to comply with these precautions or specific warnings elsewhere in this manual will constitute a default under safety standards of design, manufacture and intended use of the instrument. ITECH assumes no liability for the customer's failure to comply with these precautions.

WARNING

- Series IT8500G+ electronic load supports 110V/220VAC input and need to switch the input voltage before operation.
- Do not use the instrument if it is damaged. Before operation, check the casing to see whether it cracks. Do not operate the instrument in the presence of inflammable gasses, vapors or dusts.
- The electronic load is provided with a power line during delivery and should be connected to a socket with a protective earth terminal. Before operation, be sure that the instrument is well grounded.
- Make sure to use the power cord supplied by ITECH.
- Check all marks on the instrument before connecting the instrument to power supply.
- Use electric wires of appropriate load. All loading wires should be capable of bearing maximum short-circuit current of electronic load without overheating. If there are multiple electronic loads, each pair of the power cord must be capable of bearing the full-loaded rated short-circuit output current
- Ensure the voltage fluctuation of mains supply is less than 10% of the working voltage range in order to reduce risks of fire and electric shock.
- Do not install alternative parts on the instrument or perform any unauthorized modification.
- Do not use the instrument if the detachable cover is removed or loosen.
- To prevent the possibility of accidental injuries, be sure to use the power adapter supplied by the manufacturer only.
- We do not accept responsibility for any direct or indirect financial damage or loss of profit that might occur when using the instrument.
- This instrument is used for industrial purposes, do not apply this product to IT power supply system.
- Never use the instrument with a life-support system or any other equipment subject to safety requirements.

CAUTION

- Failure to use the instrument as directed by the manufacturer may render its protective features void.
- Always clean the casing with a dry cloth. Do not clean the internals.
- Make sure the vent hole is always unblocked.

Copyright © Itech Electronic Co., Ltd.

Environmental Conditions

The instrument is designed for indoor use and an area with low condensation. The table below shows the general environmental requirements for the instrument. The speed of fan will change intelligently by the temperature of radiator. When the temperature is up to 40°C, the fan will be on and adjust intelligently when temperature changes.

Environmental Conditions	Requirements
Operating temperature	0°C to 40°C
Operating humidity	20%-80% (non-condensation)
Storage temperature	-20°C to 70 °C
Altitude	Operating up to 2,000 meters
Pollution degree	Pollution degree 2
Installation category	II

Note

To make accurate measurements, allow the instrument to warm up for 30 min before operation.

Regulatory Markings

CE	The CE mark indicates that the product complies with all the relevant European legal directives. The specific year (if any) affixed refers to the year when the design was approved.
UKCA	The UKCA mark indicates that the product complies with all relevant UK legal regulations (if accompanied by a year, it indicates the year the design was approved).
	The instrument complies with the WEEE Directive (2002/96/EC) marking requirement. This affixed product label indicates that you must not discard the electrical/electronic product in domestic household waste.
10	This symbol indicates the time period during which no hazardous or toxic substances are expected to leak or deteriorate during normal use. The expected service life of the product is 10 years. The product can be used safely during the 10-year Environment Friendly Use Period (EFUP). Upon expiration of the EFUP, the product must be immediately recycled.

Waste Electrical and Electronic Equipment (WEEE) Directive

2002/96/EC Waste Electrical and Electronic Equipment (WEEE) Directive

This product complies with the WEEE Directive (2002/96/EC) marking requirement. This affix product label indicates that you

Copyright © Itech Electronic Co., Ltd.



must not discard the electrical/electronic product in domestic household waste.

Product Category

With reference to the equipment classifications described in the Annex I of the WEEE Directive, this instrument is classified as a “Monitoring and Control Instrument”.

To return this unwanted instrument, contact your nearest ITECH office.

Copyright © Itech Electronic Co., Ltd.

Compliance Information

Complies with the essential requirements of the following applicable European Directives, and carries the CE marking accordingly:

- Electromagnetic Compatibility (EMC) Directive 2014/30/EU
- Low-Voltage Directive (Safety) 2014/35/EU

Conforms with the following product standards:

EMC Standard

IEC 61326-1:2012/ EN 61326-1:2013 [1][2][3]

Reference Standards

CISPR 11:2015+A1:2016 Ed 6.1
IEC 61000-3-2: 2018 RLV
IEC 61000-3-3: 2013+A1:2017
IEC 61000-4-2:2008
IEC 61000-4-3 2006+A1:2007+A2:2010/ EN 61000-4-3 A1:2008+A2:2010
IEC 61000-4-4:2012
IEC 61000-4-5:2014+A1:2017
IEC 61000-4-6:2013+cor1:2015
IEC 61000-4-11:2004+A1:2017

1. The product is intended for use in non-residential/non-domestic environments. Use of the product in residential/domestic environments may cause electromagnetic interference.
2. Connection of the instrument to a test object may produce radiations beyond the specified limit.
3. Use high-performance shielded interface cable to ensure conformity with the EMC standards listed above.

Safety Standard

IEC 61010-1:2010+A1:2016

Copyright © Itech Electronic Co., Ltd.

Content

DC Programmable Electronic Loads 1

Quality Certification and Assurance i
Warranty i
Limitation of Warranty i
Safety Symbols i
Safety Precautions ii
Environmental Conditions iii
Regulatory Markings iii
Waste Electrical and Electronic Equipment (WEEE) Directive iii
Compliance Information v

Chapter1 Inspection and Installation 1

1.1 Verifying the Shipment 1

DC Programmable Electronic Loads 1

1.2 Instrument Size Introduction 1
1.3 Adjustment of Load Handle 4
1.4 Disassembly of Load Handle 5
1.5 Rack Mounting 5
1.6 Connect quick charge test interface card (optional) 6
1.7 Connect the Power Cord 6
1.8 Connect the Device Under Test (DUT) 7

Chapter2 Quick Start 10

2.1 Brief Introduction 10
2.2 Product Feature 10
2.3 Front Panel Introduction 11
2.4 Front Panel Keys 12
2.5 Combination Keys 13
2.6 VFD Annunciators 14
2.7 Rear Panel Introduction 15
2.8 Power-on Selftest 16

Chapter3 Functions and Characteristics 19

3.1 Local/remote operation mode switching function 19
3.2 Operation Mode 19
3.2.1 Constant Current Mode (CC) 19
3.2.2 Constant Voltage Mode (CV) 20
3.2.3 Constant Resistance Mode (CR) 21
3.2.4 Constant Power Mode (CW) 22
3.3 Input On/Off Control 23
3.4 Key Lock Function 24
3.5 Short-circuit Analog Function 24
3.6 System Menu (System) 24
3.7 Config Menu (Config) 26
3.8 Trigger Function 27
3.9 LIST Operation 28
3.10 Test Function 30
3.10.1 Transient Test Function 30
3.10.2 OCP Test Function 33
3.10.3 OPP Test Function 34
3.10.4 Battery Discharge Test 35
3.10.5 CR-LED Test Function 38
3.10.6 Measurement of Voltage Rise Time 38
3.10.7 Quick charge test function (Only for IT8511G+ model) 39
3.11 Saving and Recalling Settings 44
3.12 VON Function 45
3.13 Protection Function 47
3.14 Current Monitoring (I Monitor) 48

Copyright © Itech Electronic Co., Ltd.

3.15 Ripple Function 48
3.16 Multi-channel function 49
Chapter4 Automatic Test Function 51
4.1 Introduction 51
4.2 Operation Steps 51
Chapter5 Communication Interface 55
Chapter6 Specifications 56
Appendix 68
Specifications of Red and Black Test Lines 68

Copyright © Itech Electronic Co., Ltd.

Chapter1 Inspection and Installation

1.1 Verifying the Shipment

Unpack the box and check the contents before operating the instrument. If wrong items have been delivered, if items are missing, or if there is a defect with the appearance of the items, contact the dealer from which you purchased the instrument immediately. The package contents include:

Checklist of Package Contents

Item	Qty.	Model	Remarks
DC Programmable Electronic Loads	x1	IT8500G+ series	IT8500G+ series include: IT8511G+/IT8512G+/IT8512BG+/IT8513G+ /IT8513BG+/IT8513CG+
Power cord	x1	IT-E171/IT-E172/IT-E173/IT-E174	User may select an appropriate power cord that matches the specifications of power socket used in the area. See the Section **1.7 Connecting the Power Cord** for details.
USB cord	x1	-	It is used when the communication between the device and the PC is realized through the USB interface.
(Optional) Test board of quick charge	x1	IT-E164	This is used for quick charge testing. For IT8511G+ model, this accessory is optional.
Factory calibration report	x1	-	It is the test report of the instrument before delivery.
Certificate of conformity	x1	-	-

NOTE

Upon verification of the shipment, keep the package and relevant contents thereof in a safe place. When returning the instrument for warranty service or repair, the specified packing requirements shall be met.

1.2 Instrument Size Introduction

The instrument should be installed at well-ventilated and rational-sized space. Please select appropriate space for installation based on the electronic load size.

IT8500G+ series electronic load different models are not the same size, the detail size of the electronic load is shown as below.

IT8511G+ Model

Copyright © Itech Electronic Co., Ltd.

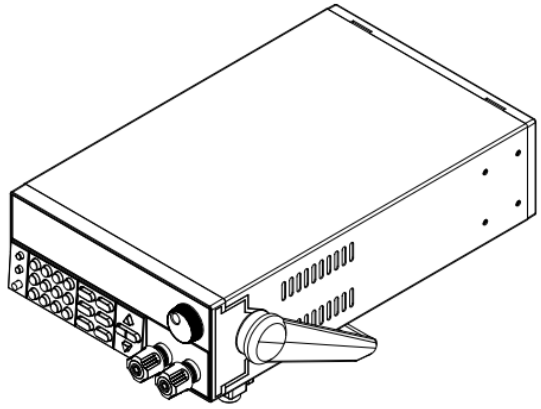

Detailed Dimension Drawing

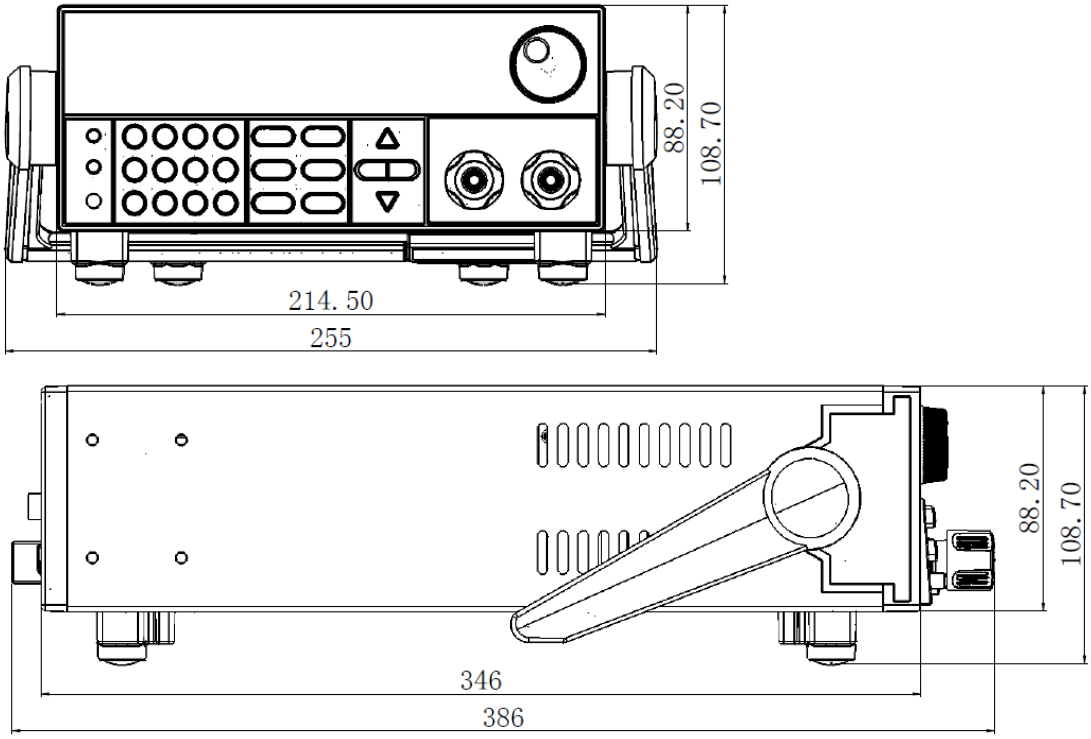

IT8512G+/IT8512BG+ Model

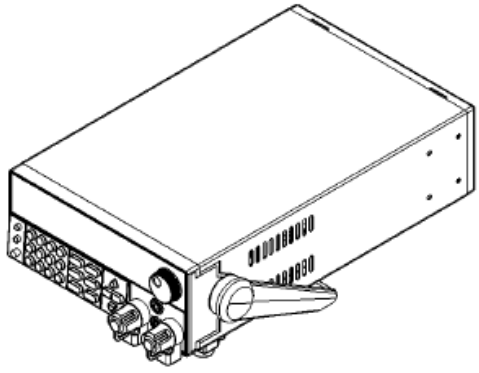

Detailed Dimension Drawing

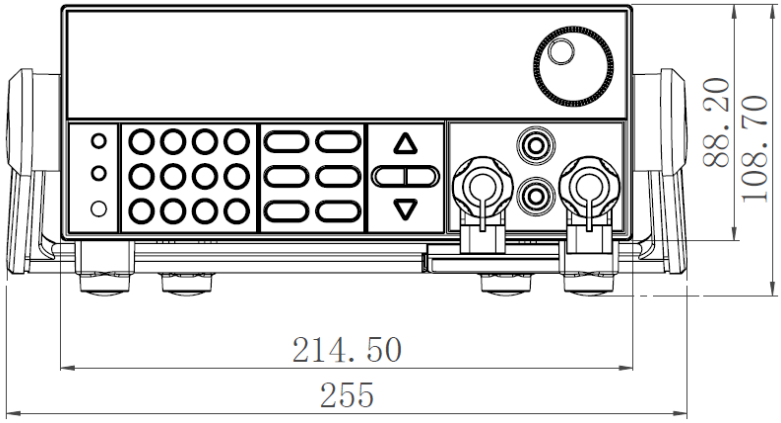

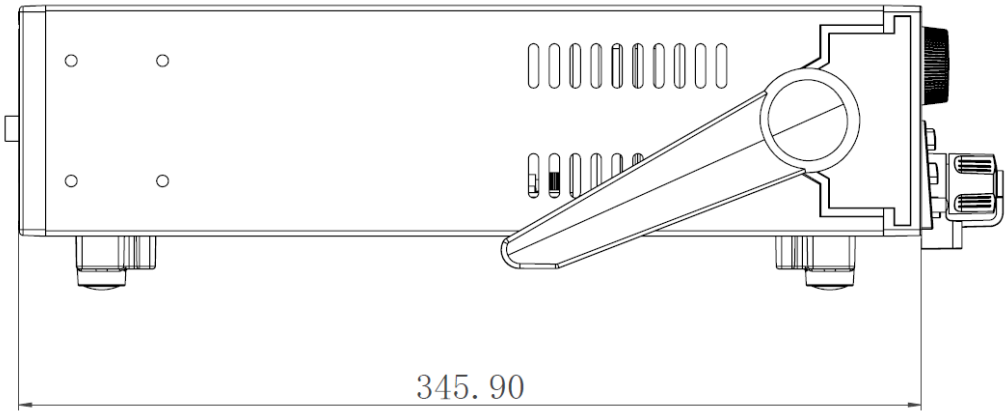

IT8513G+/IT8513CG+ Model

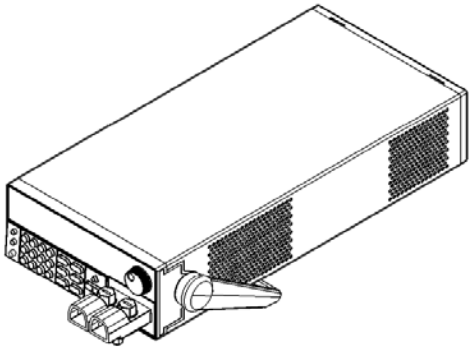

Detailed Dimension Drawing

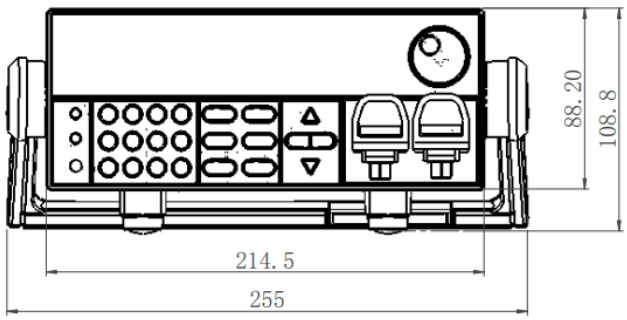

Copyright © Itech Electronic Co., Ltd.

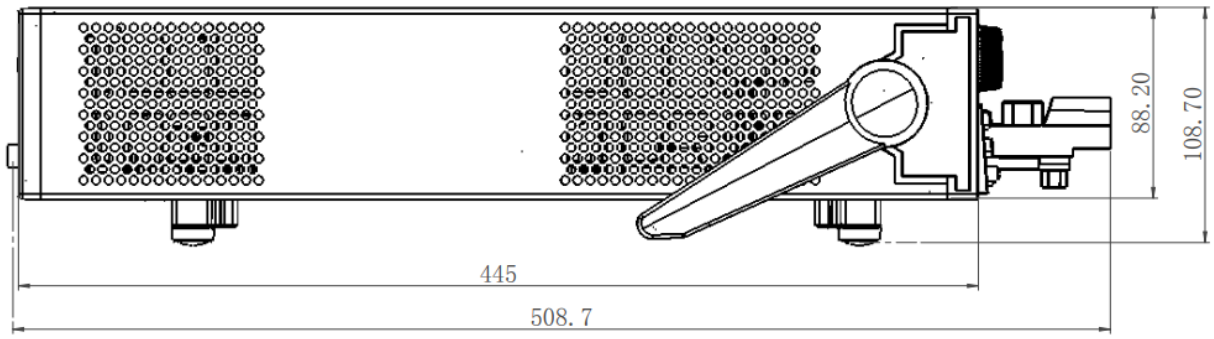

IT8513BG+ Model

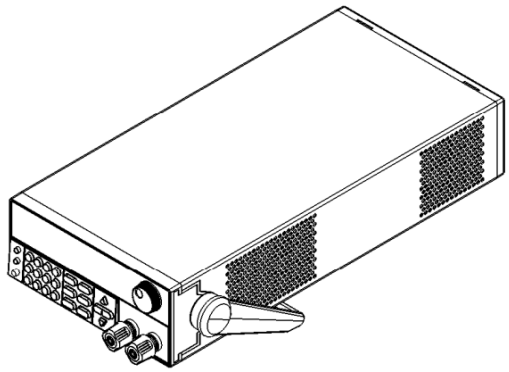

Detailed Dimension Drawing

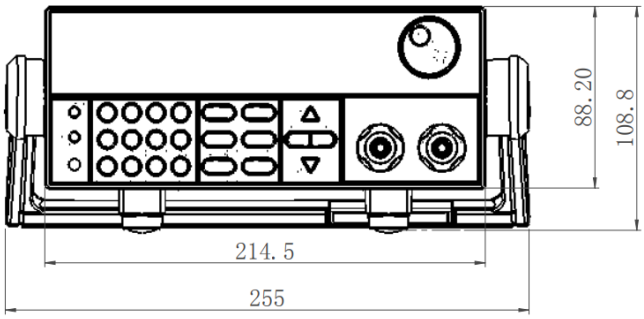

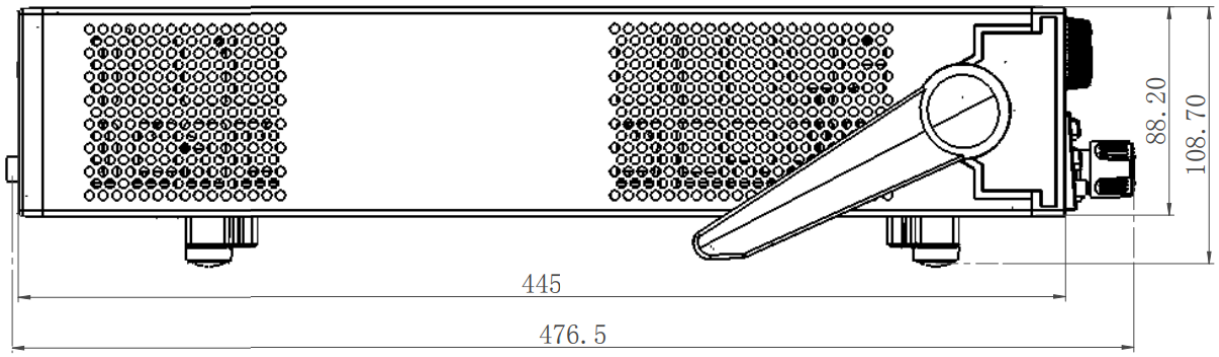

1.3 Adjustment of Load Handle

IT8511G+/IT8512G+/IT8512BG+/IT8513G+/IT8513BG+/IT8513CG+ loads are equipped with a handle for user to easily carry and place it.

The load handle may be adjusted based on three methods (as shown in icons below). Be sure that appropriate force is applied to adjust the load handle to

appropriate position.

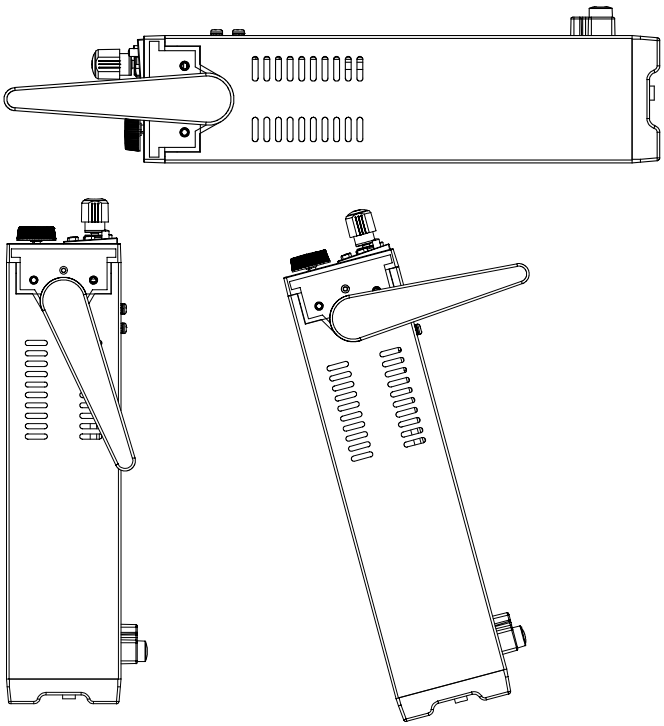

1.4 Disassembly of Load Handle

Please disassemble the load handle before installing equipment on the support.

Disassembly steps:

1. Adjust the handle to the position as shown in the figure below.

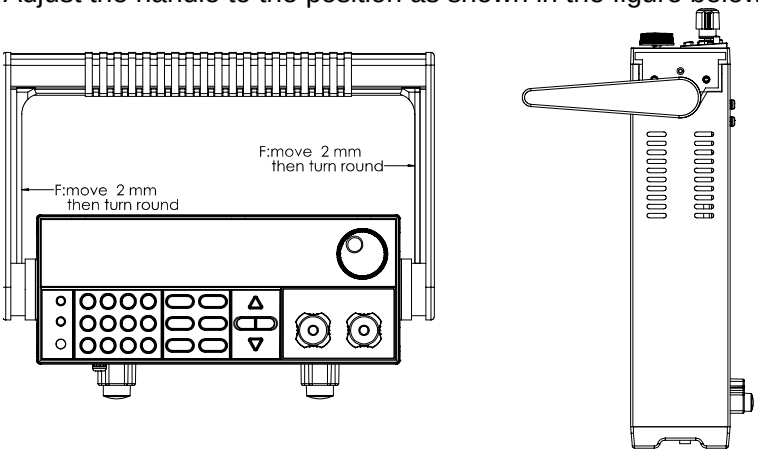

NOTE

To easily disassemble handle, align the locking mouth and locking device, which is between the handle and the instrument.

.

2. Align the locking mouth, and pull out the handle towards two sides.

NOTE

Do not use too much force and mind your hands during disassembly of load handle.

1.5 Rack Mounting

IT8511G+/IT8512G+/IT8512BG+/IT8513G+/IT8513BG+/IT8513CG+ loads can be installed on standard 19-inch rack. ITECH provides user with IT-E151/IT-E151A rack, as an optional mount kit. The detailed operation please refer to the User Manual of your mount kit.

1.6 Connect quick charge test interface card (optional)

IT-E164 is an optional accessory for IT8511G+, which facilitates the connection of the DUT during the quick charging test.

1.7 Connect the Power Cord

Before connecting the power cord

To prevent electric shock and damage to the instrument, observe the following precautions.

WARNING

- Before connecting the power cord, please confirm the 110V / 220V transfer switch to ensure that the switch of the load matches the supply voltage. Otherwise, the instrument may be damaged.
- Connect the power cord after checking that the power switch of the instrument is turned OFF. Only use the power cord supplied as a standard accessory.
- To prevent electric shock, be sure to take protective earthing. Please connect the power cable to the socket with the protective earth terminal.
- Do not use the extension cord without protective grounding function, otherwise the protection function will be invalid.
- Please use the AC power socket matching the power cord shipped with the box and take the protective earthing measures. If you cannot use a suitable AC power cord, do not use the instrument.

Power cord type

Select from the following Schedule of Power Cord Specifications an appropriate power cord that matches the voltage for the area in which you use the instrument. If the power cord included in the instrument you purchased does not match the voltage, contact the dealer or manufacturer for change.

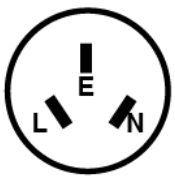

China

IT-E171



United States & Canada

IT-E172

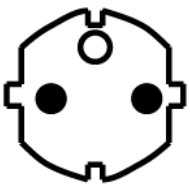

Europe

IT-E173



England

IT-E174

AC input level

A transfer switch is selectable on the rear panel:

- Option Opt.1: 220V ±10% 50Hz/60Hz
- Option Opt.2: 110V ±10% 50Hz/60Hz

Steps

1. Check whether the power switch of the instrument is turned OFF.
2. Connect one end of the power cord to the AC input connector on the rear panel of the instrument.
1. Connect the other end of the power cable to the socket configured with protective earth.

1.8 Connect the Device Under Test (DUT)

Before connecting the DUT

To prevent electric shock and damage to the instrument, observe the following precautions.

WARNING

- Before connecting the DUT, turn off the power of the test loop to avoid the risk of electric shock during connection.
- To avoid electrical shock, before testing, please make sure the rating values of the testing cables, and do not measure the current that higher than the rating value.
- Always use test cables provided by ITECH to connect the equipment. If test cables from other factories are used, please check that the test cable can withstand maximum current.

Specification

Test cables are not standard accessories of the instrument. Please select optional red and black test cables for individual sales based on the maximum current value. For specifications of test cables and maximum current values, refer to "**Specifications of Red and Black Test Lines**" in "**Appendix**".

Introduction of Binding Posts

The IT8500G+ series (except IT8516C+) load front panel contains the following terminals and the maximum rated current of the terminal at position (A) is the maximum rated input current of the instrument. Securely fasten all wires by hand-tightening the binding posts. You can also insert standard banana plugs into the front of the connectors as shown in (B), and the maximum rated current at (B) is 10 A.

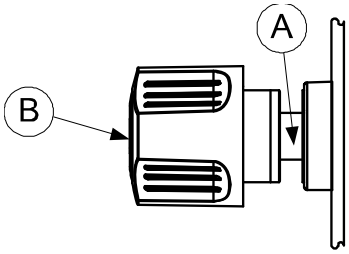

Local measurement

1. Check whether the power switch is in Off position.

2. (Optional) Unlock the load input terminal cover.
3. Unscrew the screws of the input terminals. Connect the red and black test cables to the input terminals. Re-tighten the screws.

   When maximum current that one test cable can withstand fails to meet the current rated current, use several pieces of red and black test cables. For example, the maximum current is 1,200A, then 4 pieces of 360A red and black cables are required.
4. (Optional) Install the load input terminal cover.
5. Directly connect the other end of the red and black cables to the DUT terminal.

Remote measurement

In the mode of CC, CV, CR, CW, when a relatively large current flows through the electronic load, a relatively large voltage drop will be generated on the connection line between the instrument under test and the load terminal. In order to ensure the measurement accuracy, the electronic load provides a remote measurement terminal on the rear panel, and the user can use this terminal to measure the output terminal voltage of the instrument under test.

SENSE (+) and SENSE (–) are the remote sensing inputs. Before using the remote measurement function, you must first set the load to remote measurement mode. The steps are as follows:

1. Press (Shift)+ (Config)，into the menu.

2. Press to select **SENSE**, press Enter to confirm.

3. Select **ON**, open SENSE function, then the load is set to remote measurement mode.

Note:

When not using the remote measurement function, press the OFF key to close the remote measurement mode.

When using the IT-E164 to connect the DUT (quick charge device), turn on the Sense function and the Sense terminal on the rear panel is not connected, which will cause the instrument to report Sense reverse connection protection (RRV).

4. Refer the following diagram to connect test cables.

Wiring Diagram for Remote Sensing

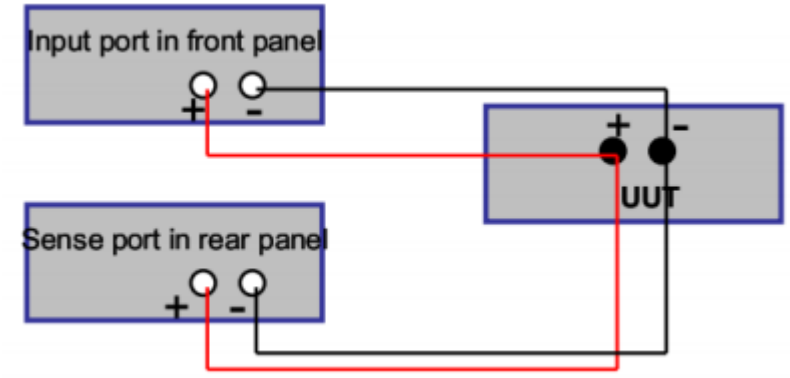

Note:

Test cables and Sense cables should be as short as possible, and Sense cables should be shielded twisted.

Copyright © Itech Electronic Co., Ltd.

Chapter2 Quick Start

This chapter will introduce the power-on inspection steps of the IT8500G+ series load to ensure that the load can be started and used normally in the initialization state. And this chapter will introduce the front panel, the rear panel, key functions and VFD display function of the electronic load, make sure that you can quickly know the appearance, instruction and the key function before you operate the load. Help you better use this series of loads.

2.1 Brief Introduction

IT8500G+ series is a single-channel programmable electronic load with power ranges from 150W to 300W and resolution up to 0.1mV/ 0.1mA. IT8500G+ series has multiple test functions such as quick charge, dynamic, automatic test, list, battery and short circuit. Mainly used in product performance testing of quick chargers, batteries, AC-DC/DC-DC modules and electronic components. Provide the best solution for design R&D and production line testing.

IT8500G+ series model table:

Model	Voltage	Current	Power	Communication Interface
IT8511G+	150V	30A	150W	Standard USB(TMC and VCP)
IT8512G+	150V	30A	300W	Standard USB(TMC and VCP),LAN
IT8512BG+	600V	15A	300W	Standard USB(TMC and VCP),LAN
IT8513G+	150V	120A	600W	Standard USB(TMC and VCP),LAN
IT8513BG+	600V	20A	600W	Standard USB(TMC and VCP),LAN
IT8513CG+	40V	200A	600W	Standard USB(TMC and VCP),LAN

2.2 Product Feature

- High-visibility vacuum fluorescent display (VFD)
- Measurement resolution: 0.1mV,0.1mA
- Up to 20KHz dynamic mode
- Four operation modes: CV (Constant Voltage), CC, CR,CW
- Voltage and current measurement speed: up to 50KHz
- Built-in standard protocol for quick charge test
- Battery test function
- OCP test, OPP test
- Measurement function: measuring voltage rise and fall time
- Automatic test function
- List mode, which can simulate a variety of load state changes
- Short circuit function
- Remote sense function
- Memory capacity to save/recall setting parameters: 100 registers
- Intelligent fans
- Build-in Buzzer as alarm signal
- Power off memory function
- Voltage ripple, current ripple test function

Copyright © Itech Electronic Co., Ltd.

2.3 Front Panel Introduction

IT8500G+ series electronic load different models have different front panels, the front panels and keyboards of different models are shown as below.

IT8511G+/IT8513BG+ Model

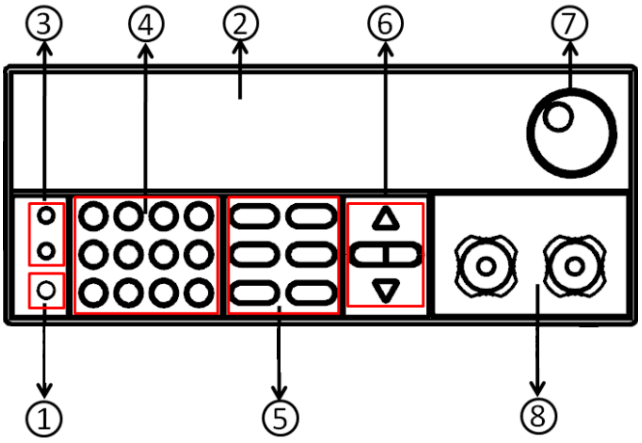

① Power switch

② Vacuum fluorescent display (VFD)

③ Compound key and the local switch key

④ Number key: Set the parameters value, achieve the menu's function by key combination

⑤ Function key:
Set the operation mode
Control the input state: On/Off

⑥ Direction function

⑦ Rotary knob

⑧ Input terminal

IT8512G+/IT8512BG+ Model

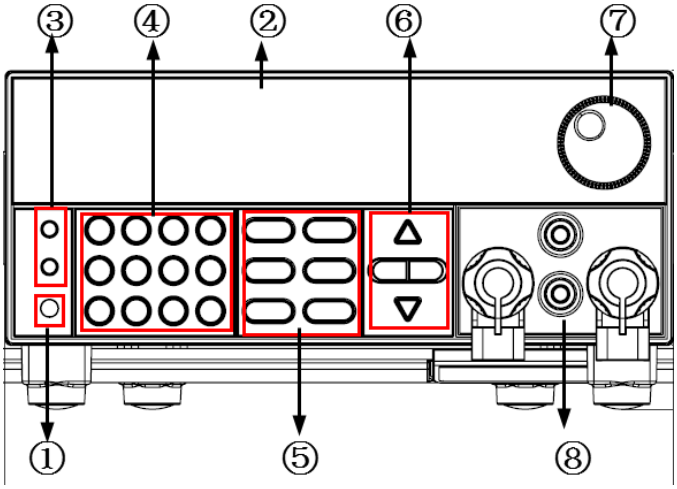

① Power switch

② Vacuum fluorescent display (VFD)

③ Compound key and the local switch key

④ Number key: Set the parameters value, achieve the menu's function by key combination

⑤ Function key:
Set the operation mode
Control the input state: On/Off

⑥ Direction function

⑦ Rotary knob

⑧ Input terminal

Copyright © Itech Electronic Co., Ltd.

IT8513G+/IT8513CG+ Model

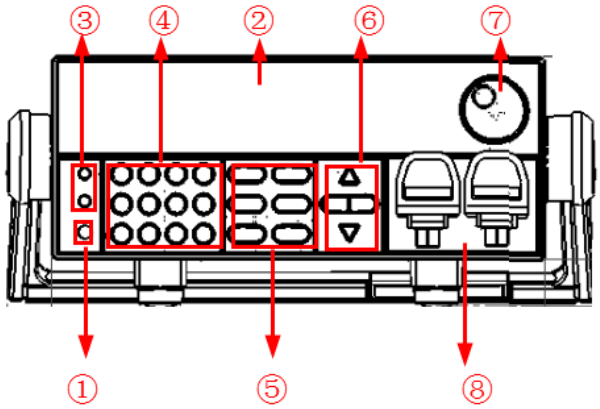

① Power switch
② Vacuum fluorescent display (VFD)
③ Compound key and the local switch key
④ Number key: Set the parameters value, achieve the menu's function by key combination
⑤ Function key
⑥ Direction function
⑦ Rotary knob
⑧ DC Input terminal

2.4 Front Panel Keys

IT8500G+ series electronic load different models have different front panel keys.

The keys in the key area of IT8511G+ are as shown in the figure below.

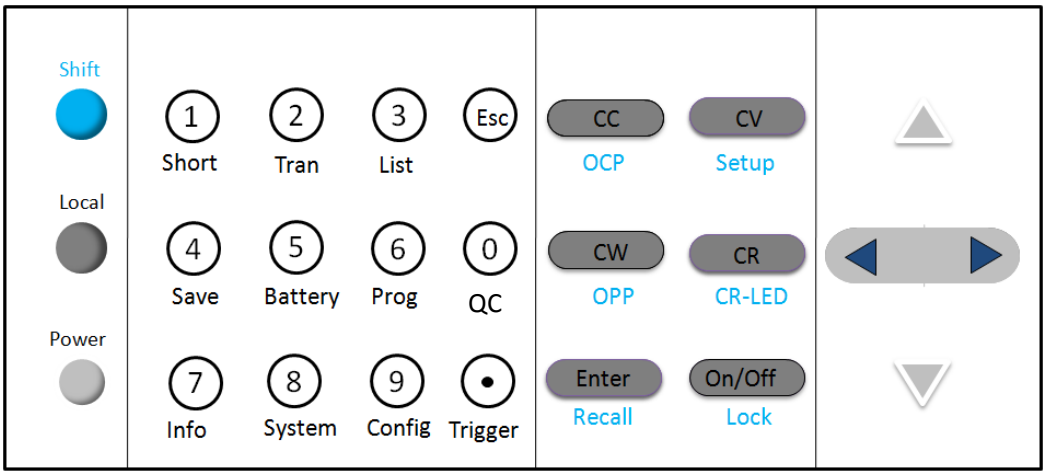

The keys in the key area of IT8512G+/IT8512BG+/IT8513G+/IT8513BG+/ IT8513CG+ are as shown in the figure below.

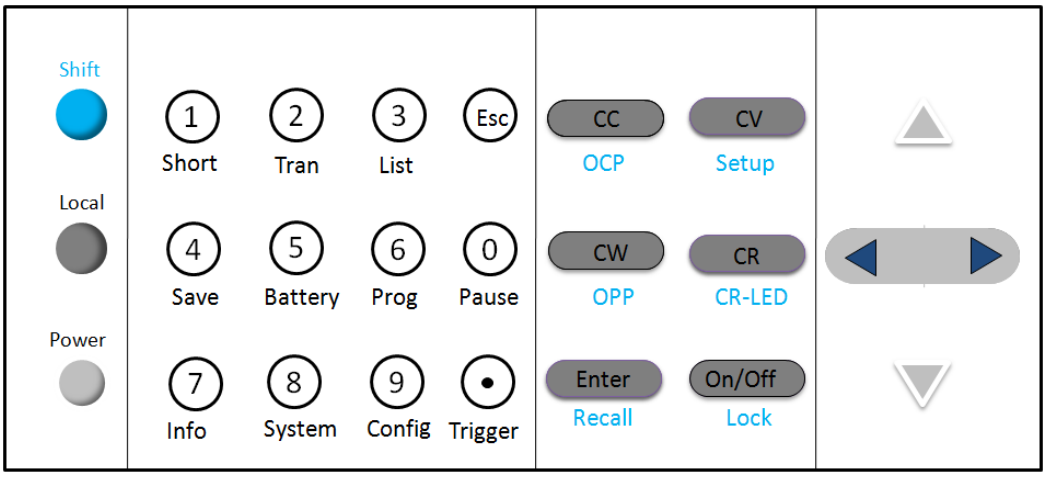

Detailed description table of the keys

Key name	Function Description
(Blue-green)	The Shift composite button is used in combination with other buttons to implement the functions marked under these buttons.
(Gray)	Local button is used to switch local and remote mode.
(Gray-white)	Power on/off button.
0 ～ 9	Enter the digits 0 to 9.
•	Decimal point
ESC	The escape button
CC	Select the constant current mode and set the input current value.
CV	Select the constant voltage mode and set the input voltage value.
CR	Select the constant resistance mode and set the input resistance value.
CW	Select the constant power mode and set the input power value.
Enter	Enter the selected value or setting.
on/off	Turn on or turn off the input of the load.
△	The scroll up key is used to select the menu item.
▽	The scroll down key is used to select the menu item.
◀▶	Move the left and right keys to adjust the cursor to the specified position when setting the value.

2.5 Combination Keys

The IT8500G+ series front panel keys are combined with the Shift composite keys to realize the functions marked below the keys. The detailed functions are described in the following table.

Copyright © Itech Electronic Co., Ltd.

Key name	Function Description
+ ① (Short)	Start or stop the short circuit test.
+ ② (Tran)	Set the transient operation parameters.
+ ③ (List)	Set the LIST operation parameters.
+ ④ (Save)	Store the parameter value of the currently load. Including: voltage, current and power values, and so on.
+ ⑤ (Battery)	Battery test function.
+ ⑥ (Prog)	Automatic test function.
+ ⑦ (Info)	Displays the model number, version number, and serial number of the electronic load.
+ ⑧ (System)	System menu setting
+ ⑨ (Config)	Configure menu setting
+ ⓪ (QC)	IT8511G+ model, enter the quick charge setting interface.
+ ⓪ (Pause)	IT8512G+/IT8512BG+/IT8513G+/IT8513BG+/IT8513CG+ model, pressing this button during the running of the automatic test indicates that the automatic test is suspended.
+ ⊙ (Trigger)	Cause an immediate trigger.
+ CC (OCP)	Enter OCP test function.
+ CV (Setup)	Set detailed parameters in CC/CV/CW/CR mode.
+ CW (OPP)	Enter OPP test function.
+ CR (CR-LED)	CR-LED function setting
+ Enter (Recall)	Recall the load parameter values that have been stored. Includes: voltage, current and power settings, and so on.
+ on/off (Lock)	Key lock function

2.6 VFD Annunciators

OFF	The load input is off.	**Error**	An error has occurred.
CC	Constant current mode	**Trig**	Waiting for the trigger signal.
CV	Constant voltage mode	**Sense**	Remote sensing is turned on.
CR	Constant resistance mode	**Prot**	Protection function is turned on.

Copyright © Itech Electronic Co., Ltd.

CW	Constant power mode	**Auto**	Voltage range automatically seleted function is turned on.
Rmt	Instrument is in the remote state.	**Lock**	The keyboard is locked.
Timer	LOAD ON timer is turned on.	**Shift**	Shift button has been pressed.

2.7 Rear Panel Introduction

IT8500G+ series electronic load different models have different rear panels, the rear panels and keyboards of different models are shown as below.

IT8511G+ Model

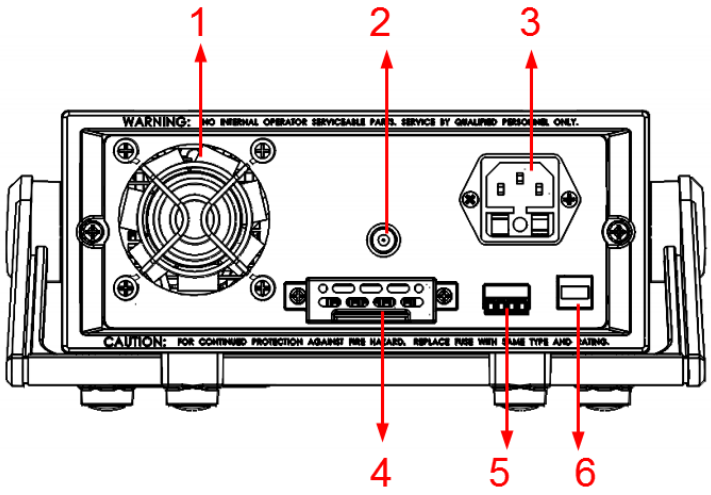

① Thermal window
② Current monitoring terminal
③ AC power input terminal (fuse included)
④ Sense measurement terminal, quick charge test terminal, multi-channel connection terminal
⑤ External trigger terminal, automatic test external control terminal
⑥ USB（TMC,VCP）communication Interface

IT8512G+/IT8512BG+ Model

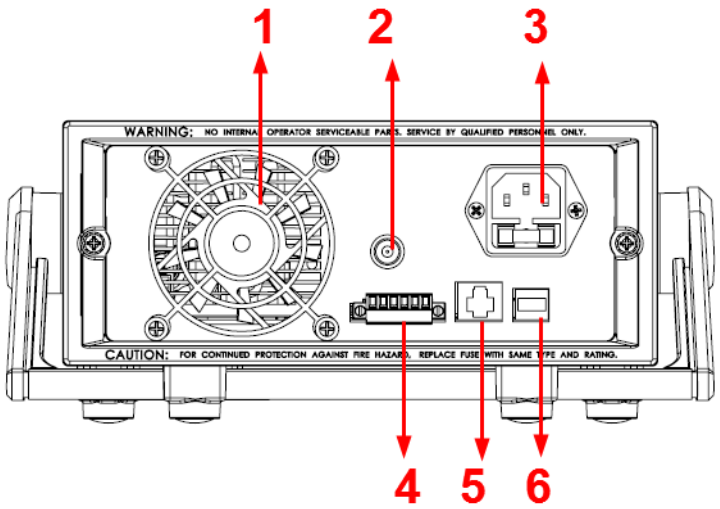

① Thermal window
② Current monitoring terminal
③ AC power input terminal (fuse included)
④ Multi-channel connection terminal, External trigger terminal, Automatic test signal terminal
⑤ LAN communication interface
⑥ USB（TMC, VCP）communication interface

IT8513G+/IT8513BG+/IT8513CG+ Model

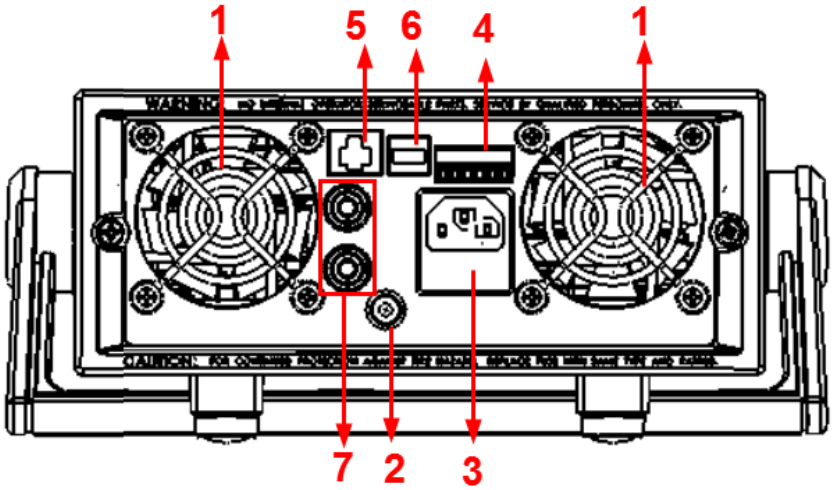

① Thermal window
② Current monitoring terminal
③ AC power input terminal (fuse included)
⑦ Sense measurement terminal
④ Multi-channel connection terminal, External trigger terminal, Automatic test signal terminal
⑤ LAN communication interface
⑥ USB（TMC, VCP）communication interface

2.8 Power-on Selftest

A successful test process indicates that the instrument meets the factory specifications and can be operated well.

Before operation, please confirm that you have fully understood the safety instructions.

警告

- To avoid burning out, be sure to confirm that power voltage matches with supply voltage(220/110VAC toggle switch is located at the bottom of the device).
- Be sure to connect the main power socket to the power outlet of protective grounding. Do not use terminal board without protective grounding. Before operation, be sure that the power supply is well grounded.
- To avoid burning out, pay attention to marks of positive and negative polarities before wiring.

Selftest steps

Normal selftest procedures:

Copyright © Itech Electronic Co., Ltd.

1. Correctly connect the power cord. Press **[Power]** key to start up.

   The VFD display of the electronic load display the Electronic load initialization information : “System Init…”.

2. After selftest, VFD display information below.

   0.0000V 0.000A

   0.00W I=0.00A

   OFF cc

   Information description

   - The first line display actual voltage and current value.
   - The second line display the actual power value and the setting current/voltage/power/resistance value.
   - The third line display the input state/operation mode.

3. Press (Shift)+7(Info),VFD display products information. You can press △ ▽ buttons to examine product’s model/SN/software version.

   IT85XXXG+

   SN1:XXXXXXXXXXXXX

   SN2: XXXXX

   VER -X.XX-X.XX-X.XX

Error Information References

The following error information may occur when an error occurs during Power On self-test:

- If the EEPROM was damaged, the VFD will display “Eeprom Fail”.
- If the system setting data are lost, then VFD will display “SYSTEM DATA LOST”, please enter the 8 (System) menu item to reset the parameters.
- If the calibration data in EEPROM is lost, then VFD will display “Cal data lost”.
- If the system setting data in EEPROM is lost, the VFD will display “Eeprom data lost”. Please press [Shift] + [4] and [0] to save after setting parameters.

Exception handling

If the electronic load cannot start normally, please check and take measures by reference to steps below.

1. Check whether the power line is correctly connected and confirm whether the electronic load is powered.
   Correct wiring of power line => 2
   Incorrect wiring of power line => Re-connect the power line and check whether the exception is removed.

2. Check whether the power in On. **[Power]** key is under “ ”(On) status.
   Yes => 3
   No => Please check the **[Power]** key to start power and check whether the exception is removed.

3. Check whether the power voltage setting of the electronic load is larger

than the power supply voltage. If the power voltage of the load is set to 220V and the supply voltage is 110V, the electronic load will not start.

4. Check whether the fuse of electronic load is burned out.
   If yes, change fuse. Detailed steps:
   - Pull out power line and take out the fuse box at power line jack with a small screw driver. As shown below.

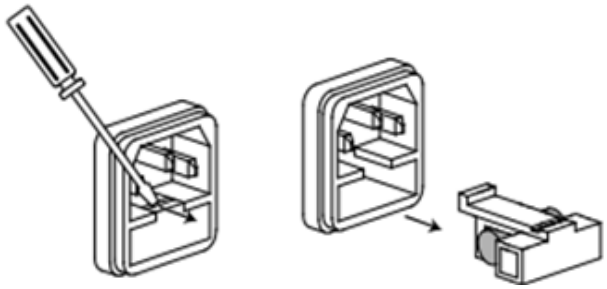

   - If the fuse is fused, replace it with a fuse of the same specification according to the model.

   - After replacement, install the fuse box back to original position, as shown below.

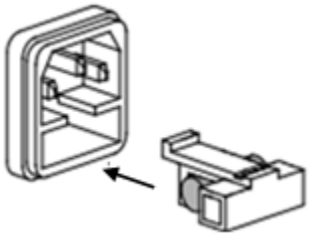

Copyright © Itech Electronic Co., Ltd.

Chapter3 Functions and Characteristics

This chapter elaborates on the functions and characteristics of electronic loads. Contents following sections:

- Switching of local/remote operation modes
- Constant-status operation mode
- Input On/Off function
- Keyboard locking function
- Short - circuit analog function
- System setup function
- Triggering function
- List mode
- Test function
- Save/Recall
- VON function
- Full protection function
- Current monitoring function
- Ripple function

3.1 Local/remote operation mode switching function

The electronic load provides two operation modes: local operation and remote operation. Communication commands can be used to switch between the two operating modes. The initial operation mode of the electronic load is the local operation mode by default.

- Local mode: Use the buttons on the front panel of the electronic load to perform related operations.
- Remote mode: You can operate the electronic loads through PC via communication cable (optional). In remote control mode, the keys on the front panel cannot work except **[Local]** key. Customers could through **[Local]** key to switch the control mode.

3.2 Operation Mode

There are four operation modes of IT8500G+ series products:

- Constant current mode (CC)
- Constant voltage mode (CV)
- Constant resistance mode (CR)
- Constant power mode (CW)

3.2.1 Constant Current Mode (CC)

Select the function key CC, the load enters the constant current mode. In the constant current mode, the electronic load consumes a constant current regardless of whether the input voltage changes. The relationship between voltage and current is shown in the figure below.

Copyright © Itech Electronic Co., Ltd.

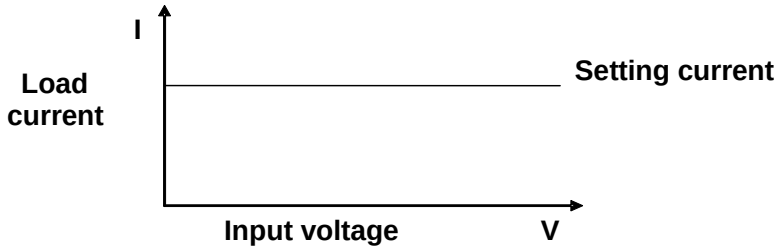

CC mode

Diagram 3-1 I-V curve in CC mode

There are two ways to set the current value:

- In CC mode, rotate the Rotary knob.
- In CC mode, input value through number keys directly, and press **[Enter]** to confirm.

In CC mode, you can also set the following parameters.

Steps

1. Press **[CC]**, and then press **[Shift]+[CV]**(Setup) to enter into the parameters setting page.
2. Set the maximum working current value, and press **[Enter]** to confirm.

   C-RANGE =10.000A

   Note

   When you set the current range to low range, the resolution of current will increase.
3. Set voltage range，and press **[Enter]** to confirm.

   V-AUTO ON OFF

   ON: Automatic range is selected;

   OFF: Manual voltage range is selected.
4. Set the current rise slope, press Enter to confirm.

   UP=3.000A/US
5. Set the current drop slope, press Enter to confirm.

   DOWN=1.000A/US
6. Set the higher limit of power, press Enter to confirm.

   P-LIMIT=100W

3.2.2 Constant Voltage Mode (CV)

In constant voltage mode, the electronic load will consume enough current to maintain the input voltage at the set voltage.

Copyright © Itech Electronic Co., Ltd.

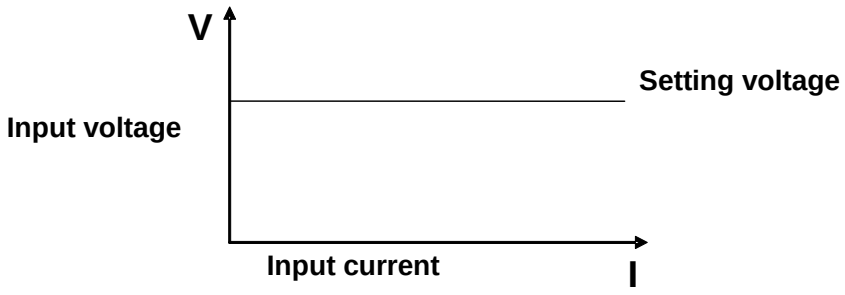

CV mode

Diagram 3-2 I-V curve in CV mode

There are two ways to change the voltage:

- In CV mode, rotate Rotary knob.
- In CV mode, input value through number keys directly, press **[Enter]** to confirm.

In CV mode, you can also set the following parameters.

Steps

1. Press CV button, and then press (Shift) + CV (Setup) to enter into the parameters setting page.
2. Set the maximum working current value, and press **[Enter]** to confirm.

   C-RANGE =10.000A

   Note

   When you set the current range to low range, the resolution of current will increase.
3. Set voltage range， and press **[Enter]** to confirm.

   V-RANGE = 100V
4. Choose high or low rate,press Enter to confirm.

   RATE HIGH LOW
5. Set the higher limit of power, press Enter to confirm.

   P-LIMIT=100W
6. Set the higher limit of power, press Enter to confirm.

   I-LIMIT=30.00A

3.2.3 Constant Resistance Mode (CR)

In constant resistance mode, the DC load will behave as a fixed resistance value. As shown below, the load linearly changes the current value with the rising of input voltage.

Copyright © Itech Electronic Co., Ltd.

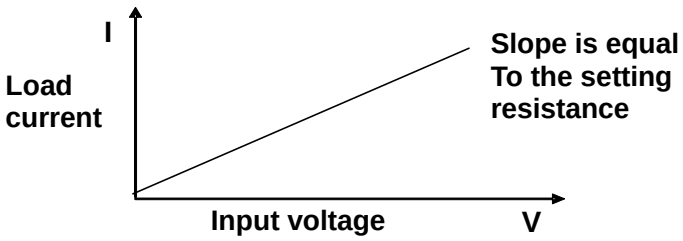

CR mode

Diagram 3-3 I-V curve in CR mode

There are two ways to set the resistance value:

- In CR mode, rotate Rotary knob.
- In CR mode, input value through number keys directly, press **[Enter]** to confirm.

In CR mode, you can also set the following parameters.

操作步骤

1. Press CR button, press (Shift) + CV (Setup) to enter into the parameters setting page.
2. Set the maximum working current value, press Enter to confirm

   C-RANGE =10.000A

   Note

   When you set the current range to low range, the resolution of current will increase.
3. Set voltage range, and press Enter to confirm.

   V-RANGE = 100V
4. Set the higher limit of power, and press Enter to confirm.

   P-LIMIT=100W
5. Set the higher limit of current, and press Enter to confirm.

   I-LIMIT=30.00A

3.2.4 Constant Power Mode (CW)

In constant power mode, the electronic load will consume a constant power, as shown in the figure below, if the input voltage rises, the input current will decrease and the power P (= V * I) will remain at the setting value.

Copyright © Itech Electronic Co., Ltd.

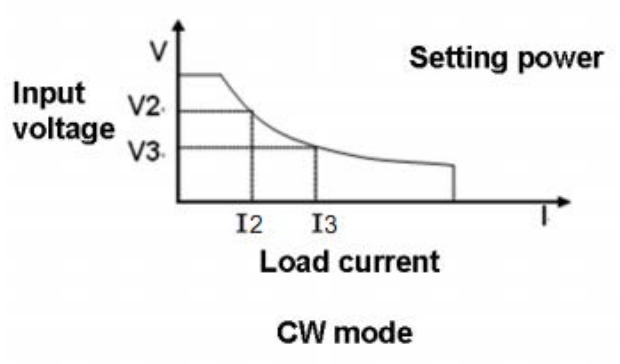

Diagram 3-4 I-V curve in CW mode

There are two ways to set the power value:

- In CW mode, rotate Rotary knob.
- In CW mode, input value through number keys directly, press **[Enter]** to confirm.

In CW mode, you can also set the following parameters.

Steps

1. Press CW button, and press (Shift) + CV (Setup) to enter into the parameters setting page.
2. Set the maximum working current value, press Enter to confirm

   C-RANGE =10.000A

   Note

   When you set the current range to low range, the resolution of current will increase.
3. Set voltage range, and press Enter to confirm.

   V-RANGE = 100V
4. Set the higher limit of power, and press Enter to confirm.

   P-LIMIT=100W
5. Set the higher limit of current, and press Enter to confirm.

   I-LIMIT=30.00A

3.3 Input On/Off Control

After the electronic load is turned on, the electronic load is in an unloaded state. **[On/Off]** button on the front panel is used to manually control input on or off..

- on/off button lighted indicates the load input is turned on, and the real-time voltage and current information about the current loop is displayed on the VFD screen.
- When the on/off button light is off, the lower left of the VFD displays OFF, indicating that the input is turned off.

The initial state of the electronic load is OFF, and the VFD display an OFF label.

Copyright © Itech Electronic Co., Ltd.

3.4 Key Lock Function

Press the combined keys (Shift)+ on/off (Lock) to lock the front panel keys, and VFD will display a **Lock** label. In this functional state, all keys are invalid except the on/off, Shift, Local. Pressing (Shift)+ on/off (Lock) again will cancel the lock.

3.5 Short-circuit Analog Function

The electronic load can simulate a short circuit at the input terminal to test whether the protection function of the DUT can operate normally when the output terminal of the DUT is short-circuited.

Press (Shift)+1 (Short) to switch the short circuit condition. The short-circuit operation does not affect the current set value. When you press (Shift)+1 (Short) again, the electronic load returns to the original setting state.

In the short-circuit status, the actual consumed current value depends on the operating mode and current range of the load. In CC, CW and CR modes, when the current is within the maximum range, the short-circuit current is the input current value. When the current exceeds the maximum range, the maximum short-circuit current is 110% of the range. In the CV mode, the short circuit is equivalent to setting the constant voltage value of the load to 0V.

3.6 System Menu (System)

Press (Shift)+ 8 (system) to enter the system menu.

POWER-ON	**POWER-ON**	Power on state of instrument
	RST(default)	When the load is powered on, set the input parameters to the factory state.
	SAV0	When the load is powered on, set the input parameters to the value of SAVE 0.
BUZZER	**BUZZER**	Buzzer status setting
	ON(default)	Enable audible beep when key is pressed.
	OFF	No sound when key is pressed.
TRIGGER	**SOURCE**	Set trigger mode
	MANUAL(Def)	Triggered from the **[Shift] + [.]** key.
	EXTERNAL	Triggered from a TTL high signal at the trigger connector on rear panel
	BUS	Triggered from a serial bus command 5AH
MEMORY	**MEMORY**	Use with the Recall button to call up the stored parameters.
	GROUP= 0	**0:** indicates1-10 groups; **1**: indicates 11-20 groups, and so on
COMM	**USBTMC**	USBTMC
	USBVCP	USBVCP If VCP is selected, the built-in device communication parameters are 9600/8/N/1.
	LAN	Only available for IT8512G+/IT8512BG+/IT8513G+ /IT8513BG+/IT8513CG+ models.
	IP	IP address
	MK	subnet mask
	GW	gateway address

Copyright © Itech Electronic Co., Ltd.

	PORT	port number
RUNMODE	**RUN**	Running mode at power on
	NORMAL	Normal mode
	BATTERY	Default in battery test mode at power on
	PROG_TEST	Default in automatic test mode at power on
	OCP_TEST	Default in OCP test mode at power on
	OPP_TEST	Default in OPP test mode at power on
CHANNEL	**CHANNEL = 1**	Set the channel number: 1~16
LINK	**LINK**	Set up synchronization operation
	OFF	Turn off synchronization
	SYNC	Input On/Off and trigger function synchronization.
	DUP	Parameter setting (see the following chapters for details), input On/Off and trigger function synchronization.
DEFAULT	**DEFAULT**	Factory default setting
	NO	Do not return instrument to factory default settings.
	YES	Return instrument to factory default settings.

Default setting（> DEFAULT）

This option is used to restore all settings in the system menu to factory setting values. Select YES, and press Enter to restore to factory setting values. Otherwise, the original system menu settings will remain unchanged.

The factory system menu is as follows:

Power-on	Rst
Buzzer	On
Trigger	Manual
Memory	Group=0

Power-on parameters（>Power-on）

When the power-on parameter is selected as Rst , the input state when the load is powered on is the factory state. If Save 0 is selected, the input state at power-on of the load is the value of SAVE 0.

Trigger mode selection（>Trigger）

When using the transient and list function, you need to use the electronic load trigger function, you can choose Manual, External, Hold, or Bus as the trigger mode. For the Manual option, the trigger signal is provided by composite keys (Shift)+ （Trigger）in front panel.

Keyboard sound settings (>Buzzer)

This item can set the key sound state. If in On mode, the electronic load will issue beeper sound when you press any button. If in Off mode, the beeper will not make a sound. The default set is in on mode.

Copyright © Itech Electronic Co., Ltd.

3.7 Config Menu (Config)

Press (Shift)+ (Config) to enter the configuration menu.

PROTECT	**OCP**	Set over current protection function.
	OFF	Disable protection function
	ON	Enable protection function
	OCP Point = 30.00A	Set the OCP level
	OCP Delay = 3S	Set the OCP delay time. Range:0~60s.
	OPP	Set over power protection.
	OPP Point = 100.00W	Set the OPP level
	OPP Delay = 3S	Set the OPP delay time. Range:0~60s.
	TIMER	Set LOAD ON timer.
	ON	Enable load-on timer
	LOAD-TIMER=10.0S	Set the load-on duration (0.1S~9999.9S)
	OFF	Disable load-on timer
MEASURE	**TIME-V1**	
	TIME-VOLT1=0.00V	Set the start voltage to measure the voltage rise/fall time.
	TIME-V2	
	TIME-VOLT2=120.00V	Set the end voltage to measure the voltage rise/fall time.
	PLC	
	PLC <50Hz> = 0.1	Set the filter parameters(0.1~30).
SENSE	**REM- SENSE**	Remote sense function
	ON	Enable remote sense function
	OFF	Disable remote sense function
RC-CTRL	**RC-CTRL**	RC-CTRL function switch When the power supply is connected to the input end of the load, because there is a capacitance between the input ends of the load, the source instantly sinks a large current into the load, causing the source output to be OFF.
	ON	Enable RC-CTRL function When the load input voltage is lower than a certain value (VON), disconnect the capacitor between the input terminals, and then connect the capacitor after the input voltage rises to a certain critical value (VON) (at this time the output of the source has stabilized).
	OFF	Disable RC-CTRL function Indicates that the capacitor at the input of the load is always connected.
VON	**VON**	Set the voltage value of starting loading through the menu. For details, see "3.12 VON Function".
	LIVING	VON point living state
	VON POINT = 0.10V	Set the VON value
	LATCH	VON point latch state
	VON POINT = 0.10V	Set the VON value

Copyright © Itech Electronic Co., Ltd.

INHIBIT	**INHIBIT**	The ON enable is triggered by the Inhibit pin on the rear panel. By default, the Inhibit pin on the rear panel is high level (3.3V). When low level (0V) is input or shorted directly with the GND pin, the instrument will be triggered to enter the Living or Latch state.
	LIVING	Work follow state (On/Off state changes, after unloading, set the Inhibit pin to high level, then the load can be restored.)
	LATCH	Latch the load status at the working load point (On/Off status changes, after unloading, you must manually turn on On/Off to start loading.)
RESET	**RESET**	Configure menu defaults This option is used to restore the settings in the CONFIG MENU to the default values of the configuration menu. Select YES and press Enter to restore the default values of the configuration menu parameters; otherwise, keep the original menu settings unchanged.
	YES	Restore the default values of the configuration menu parameters
	NO	Don't restore the default values of the configuration menu parameters

3.8 Trigger Function

Triggering is used with the transient operation; list operation and auto-test function. There are four types of triggers you can use for IT8500G+ products. The optional trigger sources for the trigger function of the electronic load are:

- **Manual:** An immediate trigger is created by pressing **[Shift]+ [•] (**Trigger**)** on the front panel.
- **External (TTL signal):** On the rear panel of the electronic load, TRIG is the trigger input terminal. When the external signal trigger mode is valid, after the low pulse (>10uS) is applied to this terminal, the load will perform a trigger operation. When the external trigger is selected, the positive and negative terminals of TRIG generate the trigger signal, and the low pulse is valid. A trigger-corresponding input can be used to change the set value (voltage, current, resistance, etc.) to toggle between set points in the transient trigger mode, or to generate pulses in the transient pulse mode.
- BUS:When the bus trigger mode is valid, when the load receives the bus trigger command *TRG, the load will perform a trigger operation.

The steps to select a trigger source are as follows:

Steps

1. Press (Shift)+ 8 (system) to enter the system menu.
   POWER-ON BUZZER
2. Press ◀▶ to move to TRIGGER, and press Enter to enter the trigger

source setting page.

SOURCE MANUAL

3. Press ◀▶ to Select trigger method, and press Enter.

   MANUAL:Manual trigger
   EXTERNAL:External signal trigger
   BUS:BUS command trigger

4. Press ESC to exit the setting page.

3.9 LIST Operation

LIST mode provides an accurate, quick and low-cost way to complete any complicated current change mode, which enables synchronization of internal or external signals in multiple quasi-bit load precision tests.

When different trigger sources are selected, the LIST function will form a variety of complex sequences by editing step value, pulse width and slope of each step to meet complicated test requirements. LIST parameters comprise designation of input list file, input step count (2-84 steps at maximum), step time (0.00005s – 3600s) as well as setting value and slope of each step. The number of times the List file is repeatedly executed ranges from 1 to 65535. The list file can be stored in non-volatile RAM available for a quick output in case of usage. The user can edit 7 groups of list files at maximum.

If the load operation mode is at List operation, the load will start List operation when it receives a trigger signal and will stop when it complete or when it receives another trigger signal.

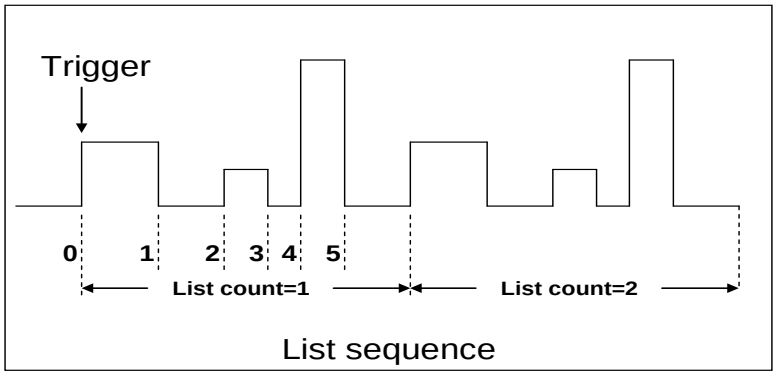

You can press the keys on the front panel of the electronic load to edit the sequence operation files, and trigger this sequence operation. Or you may directly recall existing sequence operation files to trigger the sequence operation. For example, when the DUT output voltage is 10V and the output current is 3A, after editing the sequence operation files under Constant Current (CC) mode, the steps for triggering sequence operation are as follows:

Operation steps

1. Press (Shift)+3(List) , the interface displayed as follows:

   LIST OFF CALL EDI

2. Press ◀▶ ,and move to EDI, then press Enter to confirm.
3. Set the CC range.

   LIST RANGE=3A

4. Edit number of steps. Press 2 key to edit two steps. Press Enter to

Copyright © Itech Electronic Co., Ltd.

confirm.

LIST STEP=2(2-84)

5. Edit current value in step 1 and press Enter to confirm.

   STEP 01 =1A

6. Edit slope in step 1 and press Enter to confirm.

   STEP 01 =0.1A/US

7. Edit time in step 1 and press Enter to confirm.

   STEP 01 =5S

8. Edit current value in step 2 and press Enter to confirm.

   STEP 02 =2A

9. Edit slope in step 2 and press Enter to confirm.

   STEP 02 =0.1A/US

10. Edit time in step 2 and press Enter to confirm.

    STEP 02 =5S

11. Edit repeat count and press Enter to confirm.

    REAPEAT =3

12. Save the edited file and press Enter to confirm.

    SAVE LIST =1(1-7)

13. Operate key and move to OFF. Press key (In this case, OFF changes to ON, and the VF status indicator Trig lamp of the VFD display is illuminated). Press ESC key to exit setting.

    LIST OFF CALL EDI

14. Press on/off key to open input and press (Shift)+(Trigger)

15. Press **[CC]/ [CV]/ [CR]/ [CW]** key or any composite function key to exit List test function.

For direct recall of existing List files and triggering of List operation, refer to steps below:

Steps

1. Press (Shift)+ 3 (List).

   LIST OFF CALL EDI

   Ensure that OFF lamp flicks. If not, press Enter to change the lamp from ON to OFF.

2. Press key to select CALL. And press Enter to confirm.

3. Select edited file and press Enter to confirm.

   RECALL LIST = 1

4. Press and move to OFF, then press Enter to confirm (In this case, OFF changes to ON, and the VF status indicator Trig lamp of the VFD display is illuminated). Press ESC key to exit setting.

Copyright © Itech Electronic Co., Ltd.

LIST OFF CALL EDI

5. Press on/off key to open input and press (Shift)+(Trigger).

   L1. 0. 0
   Trig

3.10 Test Function

The transient test allows switching between two different load values. A common application is to test the dynamic characteristics of DC source.

There are three different types of transient operation: **continuous, pulse, toggled.**

Transient test parameters include:

- Transient test mode
- Transiently switched A and B values
- Pulse width time (In PULSE mode)
- Frequency
- Duty cycle
- Current rise and fall slope (CC mode specific parameters)

3.10.1 Transient Test Function

Continuous Mode (Continuous)

In continuous transient operation, the load is continuously switched between two load values. An example is shown in the following figure:

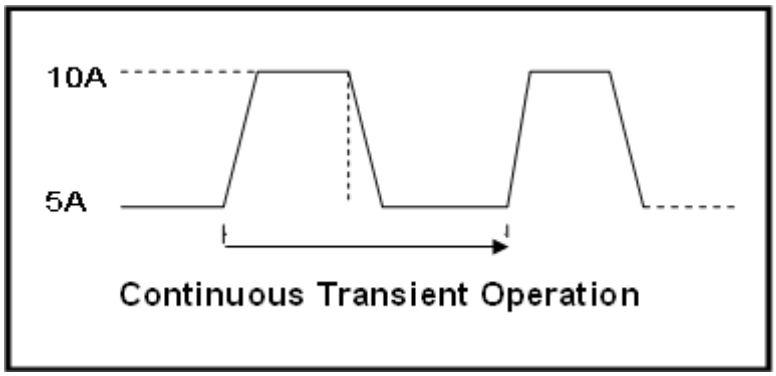

Take CC mode as an example (other modes operate similarly). When the measured instrument output voltage is 10V, current is 3A, and load current is switched between 1A and 2A, the transient test parameters and steps are set as follows:

1. Press (Shift)+(Tran) , and press to select ON, press Enter.

   TRAN ON OFF

2. Press to select CONTINUOUS, and press Enter to confirm(the indicator lamp Trig will be lighted).

   MODE CONTINUOUS
   PULSE TOGGLE

3. Set the rising slope, press Enter to confirm.

   UP=1A/uS

Copyright © Itech Electronic Co., Ltd.

4. Set the descending slope, press Enter to confirm.

   DOWN=1A/uS

5. Set level **A**, press Enter to confirm.

   LEVEL A=1A

6. Set level **B**, press Enter to confirm.

   LEVEL B=2A

7. Set the frequency, press Enter to confirm.

   FREQ=50HZ

8. Set the duty factor, press Enter to confirm.

   DUTY=98%(0.1%-99.9%)

9. Open the transient test function, press ◀▶ and move to ON, then press Enter to confirm.

   TRAN ON OFF

10. Then the VFD will display TRAN and Trig.

    10.0000V 0.0000A
    0.00W TRAN. 0
    Trig

11. Press on/off to turn on the input function, and press (Shift)+ ⊙ (Trigger) to trigger.

    It can be seen that the A/B value is continuously switched, and the number of running times is visible in the lower right corner.

    Note

    The maximum number of running times is 65535 and then reset to zero. The running times reset does not affect the execution of the transient test.

12. Press any key of CC / CV / CR / CW or other composite function keys to exit the transient test function. If you need to continue transient test parameter setting and perform transient test, repeat steps 1 to 11.

Pulse Mode (Pulse)

In pulse operation, the load operates at the A value that has been entered until a trigger is received. At the trigger, the load switches to the B value and stays at that level for the B timing value. Then the load switches back to the A value and stays there until another trigger is received.

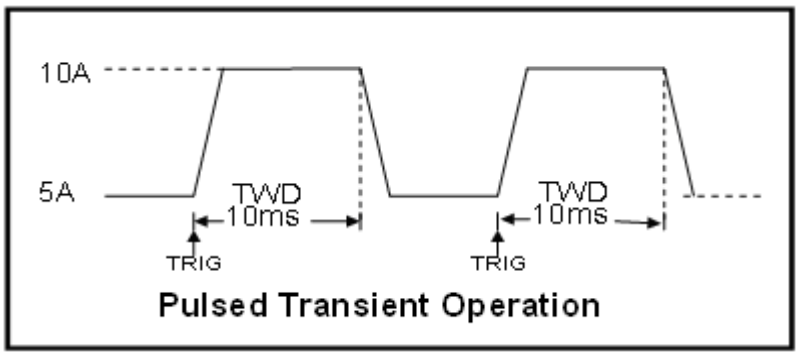

Pulsed Transient Operation

Take CC mode as an example (other modes operate similarly). When the measured instrument output voltage is 10V, current is 3A, and load current is switched between 1A and 2A, the transient test parameters and steps are set as follows:

1. Press (Shift)+ (Tran) , press and move to ON, press Enter to confirm.
2. Press , and move to PULSE, then press Enter to confirm (the indicator lamp Trig will be lighted).
3. Set the rising slope, press Enter to confirm.
4. Set the descending slope, press Enter to confirm.
5. Set level **A**, press Enter to confirm.
6. Set level **B**, press Enter to confirm.
7. Set the **WIDTH**, press Enter to confirm.
8. Open the transient test function, Press and move to on, then press Enter to confirm.
9. Then the VFD will display TRAN and Trig.
10. Press on/off to turn on the input function, and press (Shift)+ (Trigger) to trigger.
11. Press any key of CC / CV / CR / CW or other composite function keys to exit the transient test function. If you need to continue transient test parameter setting and perform transient test, repeat steps 1 to 10.

Toggle mode(Toggle)

In toggled transient operation, the load starts at the stored parameters for the mode. When a trigger is received, the load switches to B value. When another trigger is received, the load switches to the A level. It stays at the A value until another trigger is received, at which point it switches to the B value. Here's an example:

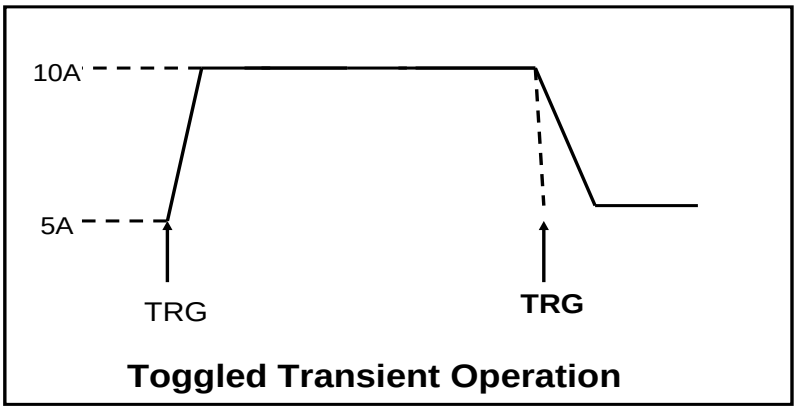

Toggled Transient Operation

Take CC mode as an example (other modes operate similarly). When the measured instrument output voltage is 10V, current is 3A, and load current is switched between 1A and 2A, the transient test parameters and steps are set as follows:

1. Press (Shift)+ (Tran) , move key to select **ON**, press Enter to confirm.

   TRAN On Off

2. Press to select transient operation mode as **TOGGLE**, then

press Enter to confirm (the indicator lamp Trig will be lighted).

MODE CONTINUOUS
PULSE TOGGLE

3. Set the rising slope, press Enter to confirm.

   UP=1A/uS

4. Set the descending slope, press Enter to confirm.

   DOWN=1A/uS

5. Set level **A**, press Enter to confirm.

   LEVEL A=1A

6. Set level **B**, press Enter to confirm.

   LEVEL B=2A

7. Open the transient test function, move ◀▶ to ON, and press Enter to confirm.

   TRAN ON OFF

8. Then the VFD will display TRAN and Trig.

   10.0000V 0.0000A
   0.00W TRAN. 0
   Trig

9. Press on/off to turn on the input function, and press (Shift)+ ⊙ (Trigger) to trigger.

10. Press any key of CC / CV / CR / CW or other composite function keys to exit the transient test function. If you need to continue transient test parameter setting and perform transient test, repeat steps 1 to 9.

3.10.2 OCP Test Function

IT8500G+ series electronic load supports the over current protection (OCP) test function. In the OCP mode, when input voltage reaches VON point, the DC load start to draw a current from the source after a delay time. The current value will increase by a certain step size at regular intervals. Simultaneously, the DC load will judge whether the input voltage exceeds OCP voltage you've set. If it is, indicates that the OCP has not occurred, then repeat the current stepping operation until the cutoff current is reached; if not, it indicates that the OCP has occurred, and then check whether the current value is within the target range. If it is within the range, PASS, otherwise FAULT. In other words, there are two conditions for the end of the OCP current step, and if anyone is satisfied, the stepping operation of the current will be ended.

- Reach the set cutoff current.
- The measured power supply voltage is less than the OCP voltage setting value.

Press (Shift)+ CC (OCP) to enter the OCP operation page, and the related parameters are described as follows.

No.	Parameter	Description
1	VON LEVEL=0.000V	Set the Von voltage value.

Copyright © Itech Electronic Co., Ltd.

2	VON DELAY=0.1S	Set the Von voltage delay time. After delay certain time, the DC load starts to draw current.
3	RANGE=3.000A	Set the working current range.
4	START=0.100A	Set the initial current.
5	STEP=0.100A	Set the step current.
6	STEP DEL=0.2S	Set delay time of each step.
7	END=2.000A	Set the cutoff current.
8	OCP VOLT=2.000V	Set the OCP voltage.
9	MAX TRIP =1.500A	Upper limit of OCP value.
10	MIN TRIP=0.900A	Lower limit of OCP value
11	SAVE OCP FILE=1	Save OCP test file (1-10)

Set the power on mode to the OCP test mode:

1. Press (Shift)+ 8 (System) (system) to enter into system menu

   0.0000V 0.000A
   POWER-ON BUZZER

2. Press right key, select RUNMODE and confirm with Enter button.

   0.0000V 0.000A
   RUN NORMAL

3. Press ◀▶ to select OCP_TEST , press Enter to confirm.

   The VFD displays the OCP test page.

   0.0000V 0.000A
   STOP 0.000A

4. After above steps, press (Shift)+ ⊙ (Trigger) button to run **OCP_TEST** file.

   Trigger it again, the machine will stop the current running state and display stop.

Note

To exit the OCP mode, you can press the **[Shift]+ [8]** (System) buttons to enter the system menu and set the **RUNMODE** to **NORMAL.**

3.10.3 OPP Test Function

IT8500G+ series electronic load supports the over power protection (OPP) test function. In the OPP mode, when input voltage reaches VON point, the DC load start to draw a power from the source after a delay time. The power value will increase by a certain step size at regular intervals. Simultaneously, the DC load will judge whether the input voltage exceeds OPP voltage you've set. If it is, indicates that the OPP has not occurred, then repeat the power stepping operation until the cutoff power is reached; if not, it indicates that the OPP has occurred, and then check whether the power value is within the target range. If it is within the range, PASS, otherwise FAULT. In other words, there are two conditions for the end of the OPP power step, and if anyone is satisfied, the stepping operation of the power will be ended.

- Reach the set cutoff power.
- The measured power supply voltage is less than the OPP voltage setting value.

Press (Shift)+CW(OPP) to enter the OPP operation page, and the related parameters are described as follows.

No.	Parameter	Description
1	VON LEVEL=0.000V	Set the Von voltage value.
2	VON DELAY=0.1S	Set the Von voltage delay time. After delay certain time, the DC load starts to draw power.
3	RANGE=5A	Set the working current range.
4	START =0.01W	Set the initial power.
5	STEP =1.00W	Set the step power.
6	STEP DEL=0.1S	Set delay time of each step.
7	END =12.00W	Set the cutoff power.
8	OPP VOLT=7V	Set the OPP voltage.
9	MAX TRIP =6.50W	Upper limit of OPP value.
10	MIN TRIP =5.60W	Lower limit of OPP value
11	SAVE OPP FILE=1	Save OPP test file (1-10)

Set the power on mode to the OPP test mode:

1. Press (Shift)+ 8 (System) to enter into system menu.

   0.0000V 0.000A
   POWER-ON BUZZER

2. Press key, select RUNMODE and confirm with Enter.

   0.0000V 0.000A
   RUN NORMAL

3. Press , select OPP_TEST , press Enter to confirm.

   The VFD displays the OPP test page.

   0.0000V 0.000A
   STOP 0.00W

4. After above steps, press (Shift)+ (Trigger) To trigger the OPP function test.

   Trigger it again, the machine will stop the current running state and display stop..

   Note

   To exit the OPP mode, you can press the **[Shift]+ [8]** (System) buttons to enter the system menu and set the **RUNMODE** to **NORMAL.**

3.10.4 Battery Discharge Test

IT8500G+ series electronic load supports the discharge test function of the battery in CC/CW/CR mode.

Copyright © Itech Electronic Co., Ltd.

The test mode should be set first, and then the discharge stop conditions. There are three discharge stop conditions to be set for IT8500G+ series products, which are **STOP VOLT**, **STOP CAP**, and **STOP TIMER**. When any of the three conditions is satisfied, the discharge is stopped and the electronic load is automatically switched to the OFF state.

When user only need to do battery testing in one or two stop conditions, the other conditions should be set to the specified value (STOP VOLT:0V; STOP CAP:999.999AH; STOP TIMER:99999S). However, when the test duration meets the STOP TIMER: 99999S condition, the test will also be terminated.

For example, if the stop voltage is used as the termination condition and the stop voltage is set, the stop capacity and the stop time must be set to the maximum value (STOP CAP = 999.999AH, STOP TIMER=99999S).

When the system checks the discharging time or battery voltage or capacity is equal to the setting stop value or under an insecurity state, the battery test will be interrupted. The battery voltage, discharge time and discharged capability are displayed on the VFD while testing.

Battery Test Data Storage

Before programming the battery test parameters, select RUNMODE as NORMAL.

The following describes the operation steps by taking a discharge current of 7 A, a cutoff voltage of 35 V, and a cutoff capacity of 11 AH as an example:

1. Press (Shift)+5(Battery) , set current range, and then press Enter.

   0.0000V 0.000A
   RANGE =30.000A

2. Set the discharge current, and press Enter.

   0.0000V 0.000A
   CURRENT= 7.000A

3. Set the discharge stop voltage, and press Enter.

   0.0000V 0.000A
   STOP VOLT= 35.000V

4. Set the discharge stop capability, and press Enter.

   0.0000V 0.000A
   STOP CAP= 11.000AH

5. Set the discharge time, and press Enter.

   0.0000V 0.000A
   STOP TIMER= 99999S

6. Save the battery test to specified file (1 – 10). After the file number is set, press Enter.

   0.0000V 0.000A
   SAVE BATT FILE 2

Set the power on state to the battery test. The steps are as follows.

1. Press (Shift)+8(System) to enter into system menu.

   0.0000V 0.000A

   POWER-ON BUZZER

Copyright © Itech Electronic Co., Ltd.

2. Press ◀▶ , select RUNMODE and confirm with Enter.

   0.0000V 0.000A
   RUN NORMAL

3. Press ◀▶ to select BATTERY , press Enter to confirm.

   The VFD displays the battery test page..

   0.0000V 0.000A
   0S 0.000AH

4. After above steps, press (Shift)+⊙(Trigger) to trigger the battery test.

   When the stop condition is reached, the discharge process will be stopped.

   Note

   To exit the **BATTERY** mode, you can press the **[Shift]+ [8]** (System) buttons to enter the system menu and set the **RUNMODE** to **NORMAL.**

Battery Test Data Recalling

The steps are as follows:

1. In the **BATTERY** mode, press (Shift)+ Enter(Recall).

   0.0000V 0.000A
   RECALL BATT=1

2. Press the number keys to select the existing **BATT_TEST** file and press Enter.

Start Battery Test

In the **BATTERY** mode, you can press (Shift)+⊙(Trigger) to trigger the running of the battery test. If the load does not detect the battery voltage, or if the stop condition has been satisfied, the test will be stopped immediately and the input of the load will be in OFF state.

During normal testing, the test time, the discharged capacity will be displayed on the VFD in real time.

During the running of the battery test, the front panel can be locked to avoid disoperation and interrupt the test process. If you need to lock the panel, press (Shift)+ on/off(Lock) to lock all other keys except (Shift)+ on/off(Lock) itself.

Stop Battery Test

Press (Shift)+ ⊙(Trigger) to stop battery discharge test (load input OFF).

Exit Battery Test

To exit the **BATTERY** mode, you can press the (Shift)+ 8(System) buttons to enter the system menu and set the **RUNMODE** to **NORMAL**.

Copyright © Itech Electronic Co., Ltd.

3.10.5 CR-LED Test Function

IT8500G+ series electronic load provides LED simulation function. The LED equivalent circuit is shown in the figure below. It is the series connection of resistor Rd and voltage source Vf. Its VI curve is equivalent to the tangent of the real LED nonlinear VI curve at the operating point (Vo, LED-Io) .

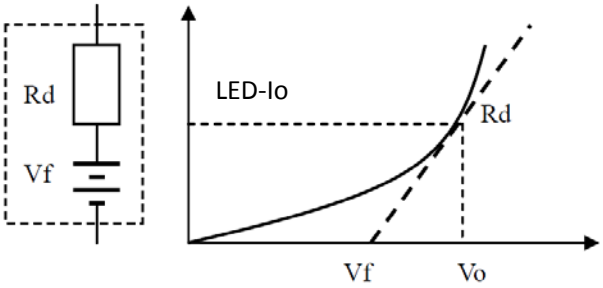

Users need to set 3 parameters: Vo, LED-Io, Rd-Coeff:

- LED-Io represents the rated output current of the tested LED power supply;
- Vo represents the forward operating voltage of the LED at the forward operating current LED-Io, which can be obtained from the VI curve in the LED specification. The real load is usually connected with n LEDs in series, so Vo should be set to n times the single-cell parameter , Can also be set to any value within the output voltage range of the LED power supply;
- Rd-Coeff is the ratio of the series equivalent resistance (Rd) to the total equivalent resistance of the LED load (Vo/LED-Io), that is, Rd-Coeff = Rd/(Vo/LED-Io). In series applications, Rd- The Coeff parameter is only related to the VI curve of the selected LED itself, and has nothing to do with the number of series connections.

Therefore, the user can determine the LED-Io according to the rated output current of the LED power supply, and then calculate the Rd-Coeff parameter in combination with the VI curve on the LED specification, and then adjust arbitrarily within the output voltage range of the LED power supply to realize the real LED simulated pull test for the LED power supply.

Set CR-LED mode

1. Press (Shift)+ CR keys to enter configuration menu, and set the Vo value.
2. Press Enter to save the settings.
3. Press (Shift)+ CV keys to enter the setup menu, and set the value of LED-Io and Rd-Coeff.
4. Press Enter to save the settings.
5. Press on/off key to turn on load input.

3.10.6 Measurement of Voltage Rise Time

The IT8500G+ series electronic load is provided with special voltage rise/drop time measurement function. This function gives a simple analog of voltage rise/drop speed of oscilloscope test power.

Operation methods:

1. Press (Shift)+ keys to enter configuration menu. Press Right key. Select **Measure** and press Enter key.

Copyright © Itech Electronic Co., Ltd.

2. Press ◀▶ to select “TIMEV1” . Press Enter key. Press numeric keys to set initial voltage value and press Enter key.

3. Press ◀▶ to select “TIMEV2”, Press Enter key. Press numeric keys to set final voltage value and press Enter key.

4. Press ESC to exit setting.

5. Back to the main interface，set CC=1A(For example), press **[On/Off]** to turn on input.

6. Press up/down key, Switch to the place where the loaded time is displayed.

   VFD second line will display time 0.0000S.

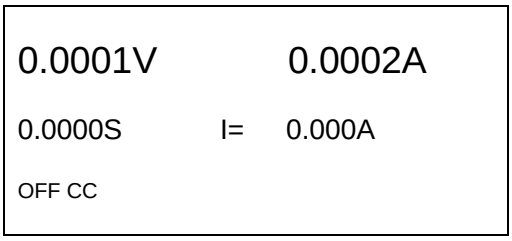

7. Connect DC power to be tested to the input terminal of the electronic load. The power is set with a value that is higher than the set final voltage value. Keep power output in OFF status.

8. Turn on the power output.

9. The electronic load timer starts timing. After ending, time will keep stable, which is rise time of voltage (from V1 to V2).

10. Turn off the power output. The electronic load VFD will display voltage drop time (from V2 to V1).

3.10.7 Quick charge test function (Only for IT8511G+ model)

IT8511G+ electronic loads provide a unique quick charge test function. This function can greatly simplify the test process for quick chargers, and the test results are easy to view.

(Shift)+0 menu is introduced as follows:

INFO	D+ D-	Used to display D+, D- values. Switch to the type-C channel line display by pressing the up and down keys and the Enter key.
	CC-SEL	It is used to display the type-C channel line. Press the Enter key in the CC-SEL interface to switch the display of the CC line (CC1 and CC2).
DETECT	**QC2.0 DETECT……**	Test which protocols the quick charge device supports. When entering the detect test, different protocols will be scanned and tested.

Copyright © Itech Electronic Co., Ltd.

		When the scan test is completed, it will display whether each protocol is supported or not. Currently, the testable protocol is QC2.0/QC3.0/PE+/PE2.0/PD2.0/PD3.0/FCP/SCP. Switch to display the test results by the left and right keys. If QC2.0 is supported, display the voltage point that can be set. If QC3.0 is supported, display the voltage range that can be set. If PE+/PE2.0 is supported, display “SUPPORT”. If PD2.0 is supported, display Maximum voltage and current value. If PD3.0 is supported, display FIX number and PPS number, and press the up and down keys to switch the display. FCP is supported, display the voltage point that can be set. SCP is supported, display The voltage range and the maximum current value that can be set. If the protocol sniffing test is not supported, it will display "NO SUPPORT".
TEST	**MODE**	Switch and set quick charge mode by pressing the left and right keys，see the description below for the parameter settings corresponding to the protocols <QC2.0|QC3.0|PE+|PE+2.0|USBPD+PPS|SCP|FCP>; Press up key to switch to D+, D- display, press down key to return to Mode selection.

- Press (Shift)+0, Enter the quick charge manual mode interface (select the TEST option), switch to set the quick charge mode <QC2.0|QC3.0|PE+|PE+2.0|USBPD+PPS|SCP|FCP> by pressing the left and right keys.

  The function implemented here is to test whether the DUT supports the protocol according to the manually selected quick charge protocol. If it does, the VFD screen will display the measured voltage value, otherwise it will display NO SUPPORT.

  The parameters are described as follow:

Serial number	Parameter name	Parameter Description	Setting method
1	QC2.0	Select the setting voltage of the QC2.0 protocol, the highest can be set to 20V, press the left and right keys to select 5V, 9V, 12V, 20V.	Left and right buttons, knob
2	QC3.0	Select the setting voltage of the quick charge QC3.0 protocol, the setting range is 3.6V~20V, and the steps are +0.2V, -0.2V, +1V, -1V.	Left and right buttons, knob

Copyright © Itech Electronic Co., Ltd.

3	PE+	Select the setting voltage of PE+ quick charge protocol, the highest can be set to 12V, press the left and right keys to select 5V, 7V, 9V, 12V.	Left and right buttons, knob
4	PE+2.0	Select the setting voltage of PE+2.0 quick charge protocol, the setting range is 5V~20V.	Number buttons
5	USBPD+PPS	a. Select USBPD+PPS b. Press the up and down keys to select different voltage Position(up to 7 POS). When POS is in PD mode, it displays the options of voltage and current values in the PD protocol. c. When a Position is in PPS mode, display the voltage range and maximum current value that can be set in PPS. d. Press Enter to enter the voltage value and current value setting interface of the quick charge device. If PD+PPS is not supported, it will display NO SUPPORT.	Setting method in PD: Left and right buttons Setting method in PPS: Left and right buttons, Number buttons. Press the left and right keys to select the corresponding POS point, press the up key to enter the CC-SEL display interface, and press the down key to return to the POS voltage selection interface.
6	FCP	Select the FCP quick charge protocol to read the supported voltage level from the quick charge device.	Left and right buttons, knob
7	SCP	Select SCP quick charge protocol, read the supported voltage setting range (such as 3.4V~12V) and the maximum setting current (such as 2.0A) from the quick charging device. Press Enter to set the voltage and current values	Left and right buttons, knob, Number buttons

- Press (Shift)+6, Enter the quick charge test editing interface, set the relevant test parameters, after setting the last parameter, the device automatically enters the quick charge test mode, and the running test is to be triggered.

  The parameters are described as follow:

Serial number	Parameter name	Parameter Description
1	MAX CURR	Set the maximum current value
2	MAX VOLT	Set the maximum voltage value
3	MAX POWER	Set the maximum power value
4	AUTO-RUN	Choose whether to run automatically. Select "Yes" to set a starting load voltage value. When the load input terminal detects a voltage that meets this value, the test will automatically start; if "No" is selected, the user needs to manually control whether to start the load test.
5	TRIG-VOLT	When AUTO-RUN selects "Yes", set the starting voltage to trigger the execution of the quick charge test.
6	TEST-BEEP	After the setting test is over, the buzzer will sound for the success or failure of the test. PASS: The test is successful, the buzzer sounds; Fail: The test fails and the buzzer sounds.
7	STOP	Set test cut-off conditions. COMP: Stop until the test is completed; FAULT: If a single Step test fails during the test, it will stop immediately.
8	OUTP-COND	Set the output conditions. After the test is stopped, the Go/NG terminal on the rear panel of the load will output a level switch or pulse signal according to the selected output conditions. PASS: The test pass FAIL: The test fail END: The test end DISABLE: Disable this function, that is, no signal is output from the Go/NG terminal The default output of Go/NG terminal is low level. Taking the PASS option as an example, when the test is completed and passed, the Go/NG terminal will output a high level or 50mS high level pulse signal; when the quick charge test is run again, when the test is completed and passed, the Go/NG terminal will output a pulse signal Low level or 50mS high level pulse signal.
9	OUTP-MODE	Set output mode. After the test is stopped, the Go/NG terminal on the rear panel of the load will output a level switch or pulse signal according to the selected output conditions. LEVEL: Output a level switch

Copyright © Itech Electronic Co., Ltd.

		PULSE: Output a 50ms (±5ms) pulse signal
10	TEST STEP	Set the total number of steps for the quick charge test. Range: 2-50.
11	GO STEP	Set the number of steps to start. Range: 1~STEP-NUM.
12	QC-MODE	Set the quick charge protocol and protocol related parameters. Setting to OFF means that the quick charge protocol is not supported, and directly enters the ordinary automatic test programming interface; Support protocol <PD2.0|PD3.0|QC2.0|QC3.0|PE+|PE2.0|SCP |FCP >. QC2.0|PE+|FCP: Enter the interface of selecting the corresponding voltage level; QC3.0|PE2.0: Enter the setting voltage interface; PD2.0: Enter the PD-POS selection interface; PD3.0:Enter PD-POS option (up to 7 POS); ISRC: Set the current value of the quick charging device; VSRC: Set the voltage value of the quick charging device; SCP: Enter the setting interface of ISRC and VSRC.
13	MODE	Select the working mode of the load. Optional <CC CV CW CR>.
14	S01 VOLT	When MODE selects CV, set the first pull-up voltage value here.
15	SHORT	Select whether to enable the short-circuit function. ON: Turn on short circuit test OFF: Turn off the short circuit test
16	READBACK	Select comparison item <Voltage|Current|Power|VP+|VP-|VPP|IP+|IP-|IPP>. Voltage|Current|Power: Voltage, current, power VP+/VP-/VPP: Voltage ripple, maximum/minimum/peak-to-peak value. IP+/IP-/IPP: Current ripple, maximum/minimum/peak-to-peak value.
17	S01 MAX S01 MIN	Set the reference range of the comparison item: the maximum value and the minimum value.
18	S01 DELAY	Set the test execution duration of this single step. After setting this parameter, press Enter to enter the PROG NEXT-STEP interface. If the current step is the last step, press Enter to enter the SAVE PROGRAM interface.
19	SAVE	After setting each step according to the above steps, save it to the automatic test file. Up to 10 automatic

Copyright © Itech Electronic Co., Ltd.

	PROGRAM	test files can be saved.

Take the IT8511G+ model as an example to introduce the operation steps:

1. Turn the input terminal screw cap counterclockwise and remove the positive and negative terminal screw caps.
2. Align the positive and negative round holes of the quick charge test board with the positive and negative terminal screws of the load and insert them, and then tighten the positive and negative terminal screw caps.
3. Insert the green plug-in terminal on the other end of the quick charge test board into the 8-Pin terminal socket on the rear panel of the load. If an 8-Pin green plug-in terminal has been installed on the rear panel of this load, you need to remove the terminal here first, and then connect to the terminal of the quick charge test board.
4. Connect the DUT to the quick charge test board.
   Insert one end of the DUT into the socket, and insert the other end into the INPUT terminal of the quick charge test board.
5. Connect the AC input power cord of the load to the mains electricity.
6. Turn on the power switch of the load.
7. Press (Shift)+6, Enter the automatic test programming setting interface
8. According to the above parameter introduction, edit an automatic test file containing quick charge test and set SAVE PROGRAM=1.
   At this time, it will automatically enter the quick charge test mode. If you press Esc to exit the current mode, you can also press (Shift)+8 (System) to enter the system menu, select **RUNMODE -> PROG-TEST**, then press shift+Enter, set the RECALL PROGRAM value to recall the test file.
9. Press (Shift)+ (Trigger) to trigger.
   After running, the interface displays the test result: PASS or FAIL.
   a) Press Enter to enter the viewing interface, and press the up and down keys to view the test results of each step.
   b) Press Esc to exit the viewing interface and return to the prog run interface.

3.11 Saving and Recalling Settings

We can save some often-used parameters in the non-volatile memory, including working mode, voltage/current value and so on. IT8500G+ series provide 100 non-volatile registers.

They are divided into 10 Memory groups: Group0-9. You can set it in the system

menu.

- Group0 means you can save and recall parameters in 0-10 registers.
- Group1 means you can save and recall parameters in 11-20 registers.
- Group2-Group9 can be concluded in the same manner.

Steps

When the operator needs to save the parameter value of the current configuration so that it can be directly recalled in subsequent operations, please refer to the following steps:

For example: the instrument works in CC mode, setting value is 1A, memory Group is 7. Save “CC 1A” in the 76th register and then recall.

- SAVE

1. Set the parameters (CC 1A), and press Enter.
2. Press (Shift)+4(Save) to save the instrument's settings to a register.
3. Enter number 7 and 6, indicates the settings is saved in the 6th register in Group7.
4. Press Enter, the setting is saved.

- RECALL

1. Press (Shift)+8(System) to enter the system setting page.
2. Press the right key to select **MEMORY**, and press Enter.
3. Set the value of Group to 7, the interface displayed as follows.

   MEMORY GROUP = 7
4. Press Enter to confirm the setting.
5. Press (Shift)+Enter(Recall) to execute the data recalling operation.

   At this point, the Enter key light is on.
6. Enter number **[**6**]**, indicates the data saved in the 6th register in Group7 is recalled.

3.12 VON Function

When testing some power supply products with a slower voltage rise, if the input of the electronic load is turned on first, and then the power is turned on, the power supply may enter the protected state. Therefore, the user can set the VON value, and when the power supply voltage is higher than this value, the electronic load starts to load.

CAUTION

Please confirm whether you need to set the VON voltage. The VON voltage is set to facilitate the user to limit the working voltage, and if you do not need to set the VON voltage, do not set this value, otherwise it may result in unloading.

You can press **[Shift]+[9]** (Config) to enter the configuration menu to set the VON voltage to control the ON/OFF state of the electronic load. The load has two performance modes, Living and Latch. When Living is selected, it indicates

that the load works in following state; when Latch is selected, it indicates that the load works in the load latched state.

If your instrument can not work normally, for example, set CC=1A, after turn on the input while the current is still 0A instead of setting value 1A, then you should check VON set firstly. If VON set is not 0V, then please modify to 0V. If the minimum voltage supported by the instrument is not 0V, the setting menu will be automatically set to the minimum value after pressing 0.

- VON LIVING MODE

  In Living mode, when power is applied to the DC load, the voltage must rise above VON setting before the load draws current from the source. If the voltage below VON setting on the load's terminals, the load will turn off input.

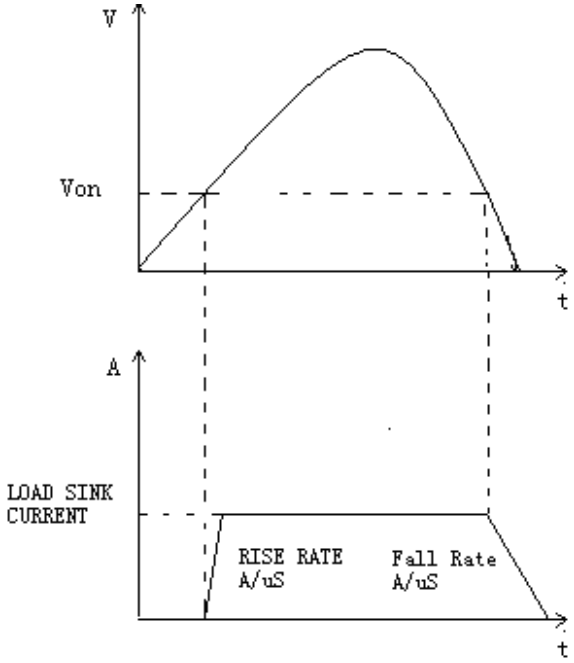

- VON LATCH MODE

  In Latch mode, as before, the load will turn on only when the voltage exceeds VON setting, but once on, it will now stay on, even if the voltage drops to zero.

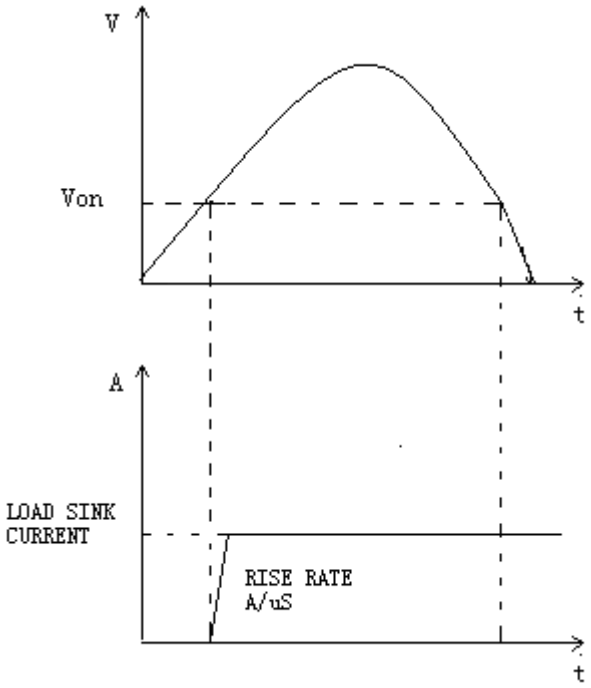

3.13 Protection Function

IT8500G+ series electronic load supports the following protection function:

- Over voltage protection (OVP)
- Over current protection (OCP)
- Over power protection (OPP)
- Over temperature protection (OTP)
- Sense remote reverse voltage (RRV) protection
- Local input reverse connection (LRV) protection

If any of the above protections are activated, the electronic load enters the corresponding self-protection mode, such as over temperature protection, the load will generate an alarm and the input will automatically switch to the OFF state. The VFD will display the OTP. You can clear the protection by pressing any button on the front panel.

Over voltage protection (OVP)

If input voltage exceeds the voltage limit set by the user, the DC load will turn the input OFF and the buzzer will sound. The display will show OVP.

Press any key on the front panel to exits OVP protection state.

Over current protection (OCP)

The DC load includes both hardware and software over current protection features.

- Hardware OCP: Maximum input current of the DC load will be limited at about 110% of the current range, once the hardware OCP is activated, the status register's OC bit will be set; when the hardware OCP is removed, the status register's OC bit will be reset. Hardware over current protection will not change the DC load's On/Off state.

Copyright © Itech Electronic Co., Ltd.

- Software OCP: When the software OCP function is turned on, if the load current exceeds the OCP set value and continues to exceed the set delay time, the load will automatically turn OFF and the VFD will display OCP. At the same time, the OC and PS bits in the status register will be set and they will remain until they are reset. For related configuration items and descriptions, see **3.7 Config Menu (Config)**.

Over power protection (OPP)

The DC load includes both hardware and software over power protection features.

- Hardware OPP: You can set the hardware OPP value of the load. The load will be limited by the hardware to the power value. Hardware OPP does not change the DC load's On/Off state.
- Software OPP: You can also set the software OPP value of the load.

  For related configuration items and descriptions, see **3.7 Config Menu (Config)**.

Over temperature protection (OTP)

When the electronic load internal power device temperature exceeds about 85°C, the electronic load activates the temperature protection mode. At this time, the load input will be automatically turned OFF, and the VFD will display the OTP. At the same time, the OT and PS bits in the status register will be set and they will remain until they are reset.

Sense Remote Reverse Voltage (RRV) protection

When the Sense function is turned on and the electronic load detects that the Sense voltage (between Sense+ and Sense-) on the rear panel is lower than the voltage between the input terminals on the front panel, it will prompt Remote Reverse Voltage (RRV) protection. At this time, please confirm whether the Sense terminal on the rear panel is correctly connected to the DUT.
Press Esc to clear the protection status.

Local Reverse Voltage (LRV) protection

When the electronic load detects that the input on the front panel is reversed, it will prompt Local Reverse Voltage (LRV) protection. At this time, please confirm whether the input terminal on the front panel is correctly connected to the DUT.
Press Esc to clear the protection status.

3.14 Current Monitoring (I Monitor)

Current monitoring terminal will output 0-10V analog signal to corresponding to 0 to full range of input current. You can connect an external voltmeter or an oscilloscope to display the input current's changing.

3.15 Ripple Function

IT8500G+ series DC electronic loads have test ripple function. In the main interface by pressing the up and down keys, you can read the VPK, APK value in the place where shows the power value. You can read ripple voltage and ripple current by sending instructions also. See in ***IT8500G+ programming guide***.

Copyright © Itech Electronic Co., Ltd.

3.16 Multi-channel function

IT8500G+ series electronic loads provide multi-channel connection function. Multiple loads (up to 16 channels, which can be composed of different types of loads of the same series) are cascaded through the System Bus to realize the synchronization of input On/Off or working mode and other parameter settings.

Take 3 loads as an example, the wiring method is as follows:

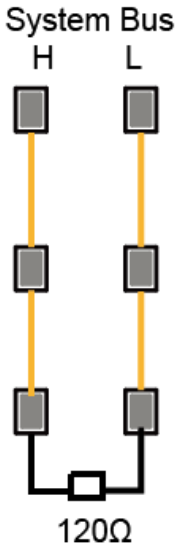

Function item	Multi-channel parameters	description
SYNC	On/Off	Synchronization of load input on or off
	Trig:Trigger signal	After the SYNC function is turned on, multiple loads that form multiple channels can synchronize the Trig signal, that is, operate one of the loads (panel button trigger or SCPI command *TRG trigger), and can simultaneously trigger other loads to run LIST and other functions
DUP	On/Off	Synchronization of load input on or off
	Trig :Trigger signal	After the DUP function is turned on, multiple loads that form multiple channels can synchronize the Trig signal, that is, operate one of the loads (panel button trigger or SCPI command *TRG trigger), and can simultaneously trigger other loads to run LIST and other functions
	setting and load value setting in CC/CV/CW/CR mode	The working mode of the load and the corresponding load value can be set synchronously, such as CC=2A.
	RUNMODE parameter setting in the System menu.	The operating mode of the load can be set synchronously, for example, the RUNMODE of one of the units can be set to OCP_TEST, and the loads of other channels can run in OCP_TEST mode synchronously.

Copyright © Itech Electronic Co., Ltd.

	Parameters in the Setup menu	The parameters in the Shift + CV (Setup) menu can be set synchronously.
	Parameters of CR-LED function	The parameters related to the CR-LED function can be set synchronously.
	Config menu	The parameters in the Config menu can be set synchronously.
	Tran: dynamic test function parameters	Dynamic function parameters can be set synchronously.
	OCP,OPP, test function	The OCP and OPP function parameters can be set synchronously.
	List function parameter	List function parameters can be set synchronously.
	Battery: Battery discharge function parameters	Battery function parameters can be set synchronously.
	Automatic test function parameters	The automatic test function parameters can be set synchronously.
	Quick charge (QC) manual test function parameters	The manual test protocol parameters in the QC> TEST menu can be set synchronously (applicable to IT8511G+ model only).

Copyright © Itech Electronic Co., Ltd.

Chapter4 Automatic Test Function

This chapter introduces the IT8500G+ series electronic load automatic test operation method and process.

4.1 Introduction

The electronic load automatically detects the change of the input voltage to determine whether to start the test. After the automatic test start voltage (Start) is set and the DUT is connected, when the load detects that the input voltage rises from 0 to the Start voltage, the automatic test starts running without the external trigger source or a trigger signal provided by manually operation.

CAUTION

When editing the automatic test mode, please avoid setting the last step to short circuit, and avoid setting the input voltage of the last step to a value less than the Start voltage, otherwise the automatic test will be executed cyclically

The automatic test can be programmed and tested for a device and show whether the test is passed or failed, which is very useful for customers. The automatic test operation only includes four steps: edit, save, recall and run.

4.2 Operation Steps

1. Press (Shift)+ 6(Prog) to set the maximum current value and press Enter to confirm.

   MAX CURR=30.00A

2. Set the maximum voltage value and press Enter to confirm.

   MAX VOLT=120.00V

3. Set the maximum power value and press Enter to confirm.

   MAX POWER=300.00W

4. Set whether to run the test step automatically and press Enter to confirm.

   AUTO-RUN ON OFF

   ON: Indicates that the input voltage reaches the set TRIG-VOLT voltage value, then the test step will be run automatically;

   OFF: Indicates that the operation of the test step is manually triggered. It can be triggered by the Trigger button on the panel, triggered by an external signal, or triggered by a remote command.

5. Set the buzzer trigger condition for automatic test, press Enter to confirm.

   TEST-BEEP PASS >

   PASS: Indicates that the test is passed and the buzzer sounds;

   FAIL: Indicates that the test fails and the buzzer sounds.

6. Set the test cut-off conditions, press Enter to confirm.

   STOP COMP FAULT

   COMP: Until all the test steps are executed, stop the automatic test

Copyright © Itech Electronic Co., Ltd.

operation.

FAULT: If a step that fails the test is encountered during the test operation, the automatic test operation will be stopped immediately.

7. Set whether the Go/NG pin on the rear panel outputs a level or pulse signal after the test is finished, press Enter to confirm.

   OUTP-COND PASS >

   PASS: After the test is passed, the Go/NG pin on the rear panel outputs a level or pulse signal;

   FAIL: If the test fails, the Go/NG pin on the rear panel will output a level or pulse signal;

   END: After the test, regardless of whether the test is passed or not, the Go/NG pin on the rear panel outputs a level or pulse signal;

   DISABLE: After the test, the Go/NG pin on the rear panel does not output any signal.

8. Set whether the output of the Go/NG pin on the rear panel is a level or a pulse signal after the test is finished, and Enter to confirm.

   OUTP-MODE LEVEL >

   LEVEL: Output level signal

   PULSE: Output pulse signal

9. Set the number of test steps, up to 50 steps can be set(2~50), press Enter to confirm.

   TEST STEP=10

10. Edit a single step, press Enter to confirm.

    GO STEP = 1

11. Select whether it is a quick charge test (only available for IT8511G+ model), and press Enter to confirm.

    QC-MODE OFF >

    OFF: For non-quick charge test step, select OFF to enter the routine automatic test programming step;

    <QC2.0|QC3.0|PE+|PE2.0|PD2.0|PD3.0|FCP|SCP>: Select the quick charge test protocol. For detailed parameter introduction and settings, please refer to "3.10.7 Quick Charge Test Function".

12. Set the mode of the current step, move the left and right cursors, when the mode option flashes, it indicates that the mode is selected, and press Enter to confirm (For example, select CC mode).

    MODE CC CV CW CR

13. Set the current value, press Enter to confirm.

    S01 CURR=A**

14. Set whether the current step is short-circuited, move the left and right cursors to select, and Enter to confirm.

    SHORT ON OFF

15. Set the type of value to be tested, move the left and right cursors to select, and press Enter to confirm (For example, select the test value as the

Copyright © Itech Electronic Co., Ltd.

current value).

READBACK V A W

16. Set the upper limit current value and press Enter to confirm.

    S01 MAX=A**

17. Set the lower limit current value and press Enter to confirm.

    S01 MIN=A**

18. Set the delay time. That is, the test value is read after the input is set for a certain period of time, and is used to test after the output is stable. The delay range is 0.1~30 seconds.

    S01 DELAY=(S)**

19. Set the sequence number of the next step, and press Enter to confirm.

    NEXT STEP = 02

20. Repeat the operation from the 11th step to the 19th step to set the following single-step automatic test parameters.

21. Save the programmed file in the EEPROM, you can save a total of 10 groups of files, if you want to put the edited file in the first group, press 1, Enter to confirm.

    SAVE PROGRAM =1(1-10)

Note

In the process of editing the automatic test file, if an editing error occurs, you can press the up arrow key to go back to the previous step and make changes without exiting the editing interface of the entire test file

Set the power-on state to automatic test

1. Press (Shift)+8 (System) to enter the system menu.

   POWER-ON BUZZER

2. Press the right button to RUNMODE, and press Enter.

   RUNMODE

3. Press the left and right keys to select PROG_TEST, and press Enter, the menu will return to RUNMODE

   RUN <PROG_TEST

4. Press ESC to exit.

   P01

Note

To exit the automatic test mode, press **[Shift] + [8]** (System) to enter the system menu and select **RUNMODE** as **NORMAL**..

Recall the test file to run

The following method can quickly recall the existing test file from the EEPROM and test it after the instrument is powered on.

Operate in automatic test mode:

1. Press (Shift)+ Enter (Recall).

   0.0000V 0.000A
   RECALL PROGRAM=1(1~10)

2. Press the number keys to select the group and press Enter.

   0.0000V 0.000A
   P01

3. If AUTO-RUN is set to OFF during editing, need press (Shift)+ (Trigger) to trigger;

   If **AUTO-RUN** is set to ON and **TRIG-VOLT** is set, please connect the DUT, and the voltage of the DUT reaches TRIG-VOLT, you can start the test. The automatic test step will be displayed on the VFD, and FAULT or PASS will be displayed after the test is over.

   0.0000V 0.000A
   P01-01 I = 2.100A

   Note

   Press **[Shift] + [0]** (Pause) to stop running the automatic test. Press to continue testing.

Copyright © Itech Electronic Co., Ltd.

Chapter5 Communication Interface

The rear panel of this series of loads is equipped with a USB interface as standard, and supports two modes: TMC and VCP. Before connecting to the PC, please select TMC or VCP through the front panel. If you choose the VCP mode, after connecting to the PC, you need to ensure that the serial port parameter settings on the PC software interface are consistent with the load device (9600/8/N/1).

USB Interface

Use a cable with USB interfaces on both ends (one end is USB A type, the other end is USB B type interface) to connect the load and the computer. All electronic load functions can be programmed via USB.

After connecting the load to the PC via USB, if you choose the VCP mode, you need to install the ITECH driver (download it on the official website or contact the ITECH technical support staff to obtain it), otherwise the communication will not succeed.

LAN Interface

In addition to the USB interface, IT8512G+/IT8512BG+/IT8513G+/IT8513BG+ /IT8513CG+ models also have a LAN communication interface as standard.

Before connecting the device and PC, please set the following parameters:

1. Press Shift+8 to enter the System menu.
2. Press the left and right direction keys or the knob to select COMM and press Enter.
3. Press the left and right direction keys or the knob to select LAN and press Enter.
4. Set the IP address and press Enter.

   The IP address of the device must be in the same network segment as the IP address of the PC.
5. Set the MK subnet mask and press Enter.
6. Set the gateway address and press Enter.
7. Set the port number (2000~65535) and press Enter.

Copyright © Itech Electronic Co., Ltd.

Chapter6 Specifications

Parameter		Model:IT8511G+	
Rated value	Voltage	0.1～18V	0.1～150V
	Current	0～3A	0～30A
	Power	0～150W	
	Resistance	0.05Ω～7500Ω	
	Minimum resistance	≒40mΩ	
	Minimum operating voltage	0.12V at 3A	1.2V at 30A
	Input leakage Current	0.7mA	
Setup Resolution	Voltage	1mV	10mV
	Current	0.1mA	1mA
	Power	10mW	
	Resistance	16bit	
Read Back Resolution	Voltage	0.1 mV	1 mV
	Current	0.1mA	1mA
	Power	10mW	
Setup Accuracy	Voltage	±(0.05%+0.02%FS)	±(0.05%+0.025%FS)
	Current	±(0.05%+0.05%FS)	±(0.05%+0.05%FS)
	Power*3	0.1%+0.2%FS	
	Resistance*1	0.01%+0.08S *2	0.01%+0.0008S
Read Back Accuracy	Voltage	±(0.025%+0.025%FS)	
	Current	±(0.05%+0.05%FS)	
	Power	±(0.1%+0.2%FS)	
Setup Temperature Coefficient (%of Output/℃ +Offset)	Voltage	≤100ppm/℃ + 100ppm/℃*FS	
	Current	≤100ppm/℃ + 100ppm/℃*FS	
Read Back Temperature Coefficient (%of Output/℃ +Offset)	Voltage	≤100ppm/℃ + 100ppm/℃*FS	
	Current	≤100ppm/℃ + 100ppm/℃*FS	
Transient Response Time	Ascending rate*4	0.0001～0.2A/uS	0.001～1.5A/uS
	Descending rate*4	0.0001～0.2A/uS	0.001～1.5A/uS
	Transient Frequency	0.001～20KHz	
AC Input	voltage range	110V ±10% or 220V ±10%	
		No three phase	

Copyright © Itech Electronic Co., Ltd.

	Frequency Range	**50/60Hz**
	Maximum current	**0.3A**
	Power factor	**0.8**
	Harmonic THDI	**None**
	Island Protection	**None**
Setup Stability-30min (%of Output +Offset)	**Voltage**	**≤0.05%+0.025%FS**
	Current	**≤0.05%+0.05%FS**
Setup stability-8h (%of Output +Offset)	**Voltage**	**≤0.05%+0.025%FS**
	Current	**≤0.05%+0.05%FS**
Readback Stability-30min (%of Output +Offset)	**Voltage**	**≤0.025%+0.025%FS**
	Current	**≤0.05%+0.05%FS**
Readback stability-8h (%of Output +Offset)	**Voltage**	**≤0.025%+0.025%FS**
	Current	**≤0.05%+0.05%FS**
Efficiency	**None**	
Remote Sense Compensation Voltage	**≤2V**	
Command Response Time	**The fastest 5mS**	
Storage Temperature	**-20℃～70℃**	
Protective Function	**OPP ≒160W, OCP ≒3.3A 33A, OVP ≒155V, OTP ≒80℃**	
Standard Interface	**Standard: USB (support VCP, TMC)**	
Isolation (output to ground)	**300V/DC/1mA**	
Isolation (input to ground)	**1.5KV/AC/5mA**	
Number of parallel machines	**Does not support paralleling (supports 16 groups of multi-channels)**	
Protection level	**IP20**	
Safety rules	**None**	
Cooling method	**Air-cooled**	
Fuse specifications	**0.5A**	
Working Temperature	**0～40℃**	
Dimension (mm)	**214.5mm*88.2mm*354.6mm**	
Weight(net)	**3.4 kg**	

*1 The voltage/current input is no less than 10% FS
*2 The scope of read-back resistance is: (1/(1/R+(1/R)*0.01%+0.08),1/(1/R-(1/R)*0.01%-0.08))
*3 The voltage/current input is no less than 10% FS
*4 Ascending/descending slope: 10%-90% current ascending slope from 0 to maximum current.

Copyright © Itech Electronic Co., Ltd.

Parameter		Model:IT8512G+	
Rated value	Voltage	0.1～18V	0.1～150V
	Current	0～3A	0～30A
	Power	0～300W	
	Resistance	0.05Ω～7500Ω	
	Minimum resistance	≒40mΩ	
	Minimum operating voltage	0.12V at 3A	1.2V at 30A
	Input leakage Current	0.07mA	0.7mA
Setup Resolution	Voltage	1mV	10mV
	Current	0.1mA	1mA
	Power	10mW	
	Resistance	16bit	
Read Back Resolution	Voltage	0.1 mV	10 mV
	Current	0.1mA	1mA
	Power	10mW	
Setup Accuracy	Voltage	±(0.05%+0.02%FS)	±(0.05%+0.025%FS)
	Current	±(0.05%+0.05%FS)	±(0.05%+0.05%FS)
	Power*3	0.1%+0.2%FS	
	Resistance*1	0.01%+0.08S *2	0.01%+0.0008S
Read Back Accuracy	Voltage	±(0.025%+0.025%FS)	
	Current	±(0.05%+0.05%FS)	
	Power	±(0.1%+0.2%FS)	
Setup Temperature Coefficient (%of Output/℃ +Offset)	Voltage	≤100ppm/℃ + 100ppm/℃*FS	
	Current	≤100ppm/℃ + 100ppm/℃*FS	
Read Back Temperature Coefficient (%of Output/℃ +Offset)	Voltage	≤100ppm/℃ + 100ppm/℃*FS	
	Current	≤100ppm/℃ + 100ppm/℃*FS	
Transient Response Time	Ascending rate*4	0.0001～0.2A/uS	0.001～1.5A/uS
	Descending rate*4	0.0001～0.2A/uS	0.001～1.5A/uS
	Transient Frequency	0.001～20KHz	
AC Input	voltage range	110V ±10% or 220V ±10%	
		No three phase	
	Frequency Range	50/60Hz	
	Maximum current	0.3A	

Copyright © Itech Electronic Co., Ltd.

	Power factor	**0.8**
	Harmonic THDI	**None**
	Island Protection	**None**
Setup Stability-30min (%of Output +Offset)	**Voltage**	**≤0.05%+0.025%FS**
	Current	**≤0.05%+0.05%FS**
Setup stability-8h (%of Output +Offset)	**Voltage**	**≤0.05%+0.025%FS**
	Current	**≤0.05%+0.05%FS**
Readback Stability-30min (%of Output +Offset)	**Voltage**	**≤0.025%+0.025%FS**
	Current	**≤0.05%+0.05%FS**
Readback stability-8h (%of Output +Offset)	**Voltage**	**≤0.025%+0.025%FS**
	Current	**≤0.05%+0.05%FS**
Efficiency	**None**	
Remote Sense Compensation Voltage	**≤2V**	
Command Response Time	**The fastest 5mS**	
Storage Temperature	**-20℃～70℃**	
Protective Function	**OPP ≒320W, OCP ≒3.3A 33A, OVP ≒160V, OTP ≒85℃**	
Standard Interface	**Standard: USB (support VCP, TMC),LAN**	
Isolation (output to ground)	**500V/DC/1mA**	
Isolation (input to ground)	**1.5KV/AC/5mA**	
Number of parallel machines	**Does not support paralleling (supports 16 groups of multi-channels)**	
Protection level	**IP20**	
Safety rules	**None**	
Cooling method	**Air-cooled**	
Fuse specifications	**0.5A**	
Working Temperature	**0～40℃**	
Dimension (mm)	**214.5mm*88.2mm*354.6mm**	
Weight(net)	**3.4 kg**	

*1 The voltage/current input is no less than 10% FS
*2 The scope of read-back resistance is: (1/(1/R+(1/R)*0.01%+0.08),1/(1/R-(1/R)*0.01%-0.08))
*3 The voltage/current input is no less than 10% FS
*4 Ascending/descending slope: 10%-90% current ascending slope from 0 to maximum current.

Copyright © Itech Electronic Co., Ltd.

Parameter		Model:IT8512BG+	
Rated value	Voltage	0.1～60V	0.1～600V
	Current	0～3A	0～15A
	Power	0～300W	
	Resistance	0.5Ω～7500Ω	
	Minimum resistance	≒188mΩ	
	Minimum operating voltage	0.6V at 3A	3V at 15A
	Input leakage Current	0.08mA	0.8mA
Setup Resolution	Voltage	1mV	10mV
	Current	0.1mA	1mA
	Power	10mW	
	Resistance	16bit	
Read Back Resolution	Voltage	1 mV	10 mV
	Current	0.1mA	1mA
	Power	10mW	
Setup Accuracy	Voltage	±(0.05%+0.02%FS)	±(0.05%+0.025%FS)
	Current	±(0.05%+0.05%FS)	±(0.05%+0.05%FS)
	Power*3	0.1%+0.2%FS	
	Resistance*1	0.01%+0.08S *2	0.01%+0.0008S
Read Back Accuracy	Voltage	±(0.025%+0.025%FS)	
	Current	±(0.05%+0.05%FS)	
	Power	±(0.1%+0.2%FS)	
Setup Temperature Coefficient (%of Output/℃ +Offset)	Voltage	≤100ppm/℃ + 100ppm/℃*FS	
	Current	≤100ppm/℃ + 100ppm/℃*FS	
Read Back Temperature Coefficient (%of Output/℃ +Offset)	Voltage	≤100ppm/℃ + 100ppm/℃*FS	
	Current	≤100ppm/℃ + 100ppm/℃*FS	
Transient Response Time	Ascending rate*4	0.0001～0.2A/uS	0.001～0.8A/uS
	Descending rate*4	0.0001～0.2A/uS	0.001～0.8A/uS
	Transient Frequency	0.001～20KHz	
AC Input	voltage range	110V ±10% or 220V ±10%	
		No three phase	
	Frequency Range	50/60Hz	

Copyright © Itech Electronic Co., Ltd.

	Maximum current	**0.3A**
	Power factor	**0.8**
	Harmonic THDI	**None**
	Island Protection	**None**
Setup Stability-30min (%of Output +Offset)	**Voltage**	**≤0.05%+0.025%FS**
	Current	**≤0.05%+0.05%FS**
Setup stability-8h (%of Output +Offset)	**Voltage**	**≤0.05%+0.025%FS**
	Current	**≤0.05%+0.05%FS**
Readback Stability-30min (%of Output +Offset)	**Voltage**	**≤0.025%+0.025%FS**
	Current	**≤0.05%+0.05%FS**
Readback stability-8h (%of Output +Offset)	**Voltage**	**≤0.025%+0.025%FS**
	Current	**≤0.05%+0.05%FS**
Efficiency	**None**	
Remote Sense Compensation Voltage	**≤2V**	
Command Response Time	**The fastest 5mS**	
Storage Temperature	**-20℃～70℃**	
Protective Function	**OPP ≒320W, OCP ≒3.3A 16A, OVP ≒630V, OTP ≒85℃**	
Standard Interface	**Standard: USB (support VCP, TMC),LAN**	
Isolation (output to ground)	**500V/DC/1mA**	
Isolation (input to ground)	**1.5KV/AC/5mA**	
Number of parallel machines	**Does not support paralleling (supports 16 groups of multi-channels)**	
Protection level	**IP20**	
Safety rules	**None**	
Cooling method	**Air-cooled**	
Fuse specifications	**0.5A**	
Working Temperature	**0～40℃**	
Dimension (mm)	**214.5mm*88.2mm*354.6mm**	
Weight(net)	**3.4 kg**	

*1 The voltage/current input is no less than 10% FS
*2 The scope of read-back resistance is: (1/(1/R+(1/R)*0.01%+0.08),1/(1/R-(1/R)*0.01%-0.08))
*3 The voltage/current input is no less than 10% FS
*4 Ascending/descending slope: 10%-90% current ascending slope from 0 to maximum current.

Copyright © Itech Electronic Co., Ltd.

Parameter		Model: IT8513CG+	
Rated value	Voltage	0.1～4V	0.1～40V
	Current	0～20A	0～200A
	Power	0～600W	
	Resistance	0.01Ω~10Ω	10Ω~200Ω
	Minimum resistance	≒3mΩ	
	Minimum operating voltage	0.6V at 200A	
	Input leakage Current	0.07mA	0.7mA
Setup Resolution	Voltage	0.1mV	1mV
	Current	1mA	10mA
	Power	10mW	
	Resistance	16bit	
Read Back Resolution	Voltage	0.1 mV	1 mV
	Current	1mA	10mA
	Power	10mW	
Setup Accuracy	Voltage	±(0.05%+0.1%FS)	±(0.05%+0.15%FS)
	Current	±(0.1%+0.1%FS)	±(0.1%+0.15%FS)
	Power*3	0.2%+0.5%FS	
	Resistance*1	0.01%+0.08S *2	0.01%+0.0008S
Read Back Accuracy	Voltage	±(0.025%+0.1%FS)	
	Current	±(0.1%+0.1%FS)	
	Power	±(0.2%+0.5%FS)	
Setup Temperature Coefficient (%of Output/℃ +Offset)	Voltage	≤100ppm/℃ + 100ppm/℃*FS	
	Current	≤100ppm/℃ + 100ppm/℃*FS	
Read Back Temperature Coefficient (%of Output/℃ +Offset)	Voltage	≤100ppm/℃ + 100ppm/℃*FS	
	Current	≤100ppm/℃ + 100ppm/℃*FS	
Transient Response Time	Ascending rate*4	0.001～0.2A/uS	0.01～1A/uS
	Descending rate*4	0.001～0.2A/uS	0.01～1A/uS
	Transient Frequency	0.001～20KHz	
AC Input	voltage range	110V ±10% / 220V ±10%	
		No three-phase	
	Frequency Range	50/60Hz	

Copyright © Itech Electronic Co., Ltd.

	Maximum current	**0.3A**
	Power factor	**0.8**
	Harmonic THDI	**None**
	Island Protection	**None**
Setup Stability-30min (%of Output +Offset)	**Voltage**	**±(0.05%+0.15%FS)**
	Current	**±(0.1%+0.15%FS)**
Setup stability-8h (%of Output +Offset)	**Voltage**	**±(0.05%+0.15%FS)**
	Current	**±(0.1%+0.15%FS)**
Readback Stability-30min (%of Output +Offset)	**Voltage**	**±(0.1%+0.1%FS)**
	Current	**±(0.2%+0.2%FS)**
Readback stability-8h (%of Output +Offset)	**Voltage**	**±(0.1%+0.1%FS)**
	Current	**±(0.2%+0.2%FS)**
Efficiency	**None**	
Remote Sense Compensation Voltage	**≤2V**	
Command Response Time	**The fastest 5mS**	
Storage Temperature	**-20℃～70℃**	
Protective Function	**OPP ≒620W, OCP ≒21A 210A, OVP ≒44V, OTP ≒85℃**	
Standard Interface	**Standard: USB (support VCP, TMC),LAN**	
Isolation (output to ground)	**500V/DC/1mA**	
Isolation (input to ground)	**1.5KV/AC/5mA**	
Number of parallel machines	**Does not support paralleling (supports 16 groups of multi-channels)**	
Protection level	**IP20**	
Safety rules	**None**	
Cooling method	**Air-cooled**	
Fuse specifications	**0.5A**	
Working Temperature	**0～40℃**	
Dimension (mm)	**214.5mm*88.2mm*354.6mm**	
Weight(net)	**3.4 kg**	

*1 The voltage/current input is no less than 10% FS
*2 The scope of read-back resistance is: (1/(1/R+(1/R)*0.01%+0.08),1/(1/R-(1/R)*0.01%-0.08))
*3 The voltage/current input is no less than 10% FS
*4 Ascending/descending slope: 10%-90% current ascending slope from 0 to maximum current.

Copyright © Itech Electronic Co., Ltd.

Parameter		Model: IT8513BG+	
Rated value	Voltage	0.1～60V	0.1～600V
	Current	0～3A	0～20A
	Power	0～600W	
	Resistance	0.5Ω～7500Ω	
	Minimum resistance	≒120mΩ	
	Minimum operating voltage	0.4V at 3A	2.4V at 20A
	Input leakage Current	0.08mA	0.8mA
Setup Resolution	Voltage	1mV	10mV
	Current	0.1mA	1mA
	Power	10mW	
	Resistance	16bit	
Read Back Resolution	Voltage	1 mV	10 mV
	Current	0.1mA	1mA
	Power	10mW	
Setup Accuracy	Voltage	±(0.05%+0.02%FS)	±(0.05%+0.025%FS)
	Current	±(0.05%+0.05%FS)	±(0.05%+0.05%FS)
	Power*3	0.2%+0.2%FS	
	Resistance*1	0.01%+0.08S *2	0.01%+0.0008S
Read Back Accuracy	Voltage	±(0.025%+0.025%FS)	
	Current	±(0.05%+0.05%FS)	
	Power	±(0.2%+0.2%FS)	
Setup Temperature Coefficient (%of Output/℃ +Offset)	Voltage	≤100ppm/℃ + 100ppm/℃*FS	
	Current	≤100ppm/℃ + 100ppm/℃*FS	
Read Back Temperature Coefficient (%of Output/℃ +Offset)	Voltage	≤100ppm/℃ + 100ppm/℃*FS	
	Current	≤100ppm/℃ + 100ppm/℃*FS	
Transient Response Time	Ascending rate*4	0.0001～0.2A/uS	0.001～0.8A/uS
	Descending rate*4	0.0001～0.2A/uS	0.001～0.8A/uS
	Transient Frequency	0.001～20KHz	
AC Input	voltage range	110V ±10% / 220V ±10%	
		No three-phase	
	Frequency Range	50/60Hz	
	Maximum current	0.3A	
	Power factor	0.8	

Copyright © Itech Electronic Co., Ltd.

	Harmonic THDI	**None**
	Island Protection	**None**
Setup Stability-30min (%of Output +Offset)	**Voltage**	**⩽0.05%+0.025%FS**
	Current	**⩽0.05%+0.05%FS**
Setup stability-8h (%of Output +Offset)	**Voltage**	**⩽0.05%+0.025%FS**
	Current	**⩽0.05%+0.05%FS**
Readback Stability-30min (%of Output +Offset)	**Voltage**	**⩽0.025%+0.025%FS**
	Current	**⩽0.05%+0.05%FS**
Readback stability-8h (%of Output +Offset)	**Voltage**	**⩽0.025%+0.025%FS**
	Current	**⩽0.05%+0.05%FS**
Efficiency	**None**	
Remote Sense Compensation Voltage	**⩽2V**	
Command Response Time	**The fastest 5mS**	
Storage Temperature	**-20℃～70℃**	
Protective Function	**OPP ≒620W, OCP ≒3.3A 21A, OVP ≒630V, OTP ≒85℃**	
Standard Interface	**Standard: USB (support VCP, TMC),LAN**	
Isolation (output to ground)	**500V/DC/1mA**	
Isolation (input to ground)	**1.5KV/AC/5mA**	
Number of parallel machines	**Does not support paralleling (supports 16 groups of multi-channels)**	
Protection level	**IP20**	
Safety rules	**None**	
Cooling method	**Air-cooled**	
Fuse specifications	**0.5A**	
Working Temperature	**0～40℃**	
Dimension (mm)	**214.5mm*88.2mm*354.6mm**	
Weight(net)	**3.4 kg**	

*1 The voltage/current input is no less than 10% FS
*2 The scope of read-back resistance is: (1/(1/R+(1/R)*0.01%+0.08),1/(1/R-(1/R)*0.01%-0.08))
*3 The voltage/current input is no less than 10% FS
*4 Ascending/descending slope: 10%-90% current ascending slope from 0 to maximum current.

Copyright © Itech Electronic Co., Ltd.

Rated value	Voltage	0.1～18V	0.1～150V
	Current	0～12A	0～120A
	Power	0～600W	
	Resistance	0.5Ω～7500Ω	
	Minimum resistance	≒15mΩ	
	Minimum operating voltage	0.2V at 12A	2V at 120A
	Input leakage Current	0.07mA	0.7mA
Setup Resolution	Voltage	1mV	10mV
	Current	1mA	10mA
	Power	10mW	
	Resistance	16bit	
Read Back Resolution	Voltage	0.1 mV	1 mV
	Current	1mA	10mA
	Power	10mW	
Setup Accuracy	Voltage	±(0.05%+0.02%FS)	±(0.05%+0.025%FS)
	Current	±(0.05%+0.05%FS)	±(0.05%+0.05%FS)
	Power*3	0.2%+0.2%FS	
	Resistance*1	0.01%+0.08S *2	0.01%+0.0008S
Read Back Accuracy	Voltage	±(0.025%+0.025%FS)	
	Current	±(0.05%+0.05%FS)	
	Power	±(0.2%+0.2%FS)	
Setup Temperature Coefficient (%of Output/℃ +Offset)	Voltage	≤100ppm/℃ + 100ppm/℃*FS	
	Current	≤100ppm/℃ + 100ppm/℃*FS	
Read Back Temperature Coefficient (%of Output/℃ +Offset)	Voltage	≤100ppm/℃ + 100ppm/℃*FS	
	Current	≤100ppm/℃ + 100ppm/℃*FS	
Transient Response Time	Ascending rate*4	0.001～0.2A/uS	0.01～1.6A/uS
	Descending rate*4	0.001～0.2A/uS	0.01～1.6A/uS
	Transient Frequency	0.001～20KHz	
AC Input	voltage range	110V ±10% / 220V ±10%	
		No three-phase	
	Frequency Range	50/60Hz	
	Maximum current	0.3A	
	Power factor	0.8	

Copyright © Itech Electronic Co., Ltd.

	Harmonic THDI	**None**
	Island Protection	**None**
Setup Stability-30min (%of Output +Offset)	**Voltage**	**≤0.05%+0.025%FS**
	Current	**≤0.05%+0.05%FS**
Setup stability-8h (%of Output +Offset)	**Voltage**	**≤0.05%+0.025%FS**
	Current	**≤0.05%+0.05%FS**
Readback Stability-30min (%of Output +Offset)	**Voltage**	**≤0.025%+0.025%FS**
	Current	**≤0.05%+0.05%FS**
Readback stability-8h (%of Output +Offset)	**Voltage**	**≤0.025%+0.025%FS**
	Current	**≤0.05%+0.05%FS**
Efficiency	**None**	
Remote Sense Compensation Voltage	**≤2V**	
Command Response Time	**The fastest 5mS**	
Storage Temperature	**-20℃～70℃**	
Protective Function	**OPP ≒620W, OCP ≒13A 130A, OVP ≒160V, OTP ≒85℃**	
Standard Interface	**Standard: USB (support VCP, TMC),LAN**	
Isolation (output to ground)	**500V/DC/1mA**	
Isolation (input to ground)	**1.5KV/AC/5mA**	
Number of parallel machines	**Does not support paralleling (supports 16 groups of multi-channels)**	
Protection level	**IP20**	
Safety rules	**None**	
Cooling method	**Air-cooled**	
Fuse specifications	**0.5A**	
Working Temperature	**0～40℃**	
Dimension (mm)	**214.5mm*88.2mm*354.6mm**	
Weight(net)	**3.4 kg**	

*1 The voltage/current input is no less than 10% FS
*2 The scope of read-back resistance is: (1/(1/R+(1/R)*0.01%+0.08),1/(1/R-(1/R)*0.01%-0.08))
*3 The voltage/current input is no less than 10% FS
*4 Ascending/descending slope: 10%-90% current ascending slope from 0 to maximum current.

Copyright © Itech Electronic Co., Ltd.

Appendix

Specifications of Red and Black Test Lines

ITECH provides you with optional red and black test lines, which individual sales and you can select for test. For specifications of ITECH test lines and maximum current values, refer to the table below.

Model	Specification	Length	Description
IT-E30110-AB	10A	1m	A pair of red and black test cables with an alligator clip at one end and a banana plug at the other end
IT-E30110-BB	10A	1m	A pair of red and black test cables with banana plugs at both ends
IT-E30110-BY	10A	1m	A pair of red and black test cables with a banana plug at one end and a Y-terminal at the other end
IT-E30312-YY	30A	1.2m	A pair of red and black test cables with Y-terminals at both ends
IT-E30320-YY	30A	2m	A pair of red and black test cables with Y-terminals at both ends
IT-E30615-OO	60A	1.5m	A pair of red and black test cables with round terminals at both ends
IT-E31220-OO	120A	2m	A pair of red and black test cables with round terminals at both ends
IT-E32410-OO	240A	1m	A pair of red and black test cables with round terminals at both ends
IT-E32420-OO	240A	2m	A pair of red and black test cables with round terminals at both ends
IT-E33620-OO	360A	2m	A pair of red and black test cables with round terminals at both ends

For maximum current of AWG copper wire, refer to table below.

AWG	10	12	14	16	18	20	22	24	26	28
The Maximum current value(A)	40	25	20	13	10	7	5	3.5	2.5	1.7

Note: AWG (American Wire Gage), it means X wire (marked on the wire). The table above lists current capacity of single wire at working temperature of 30°C. For reference only.

Copyright © Itech Electronic Co., Ltd.

Contact Us

Thanks for purchasing ITECH products. In case of any doubts, please contact us as follows:

1. Visit ITECH website: www.itechate.com.
2. Select the most convenient contact method for further information.