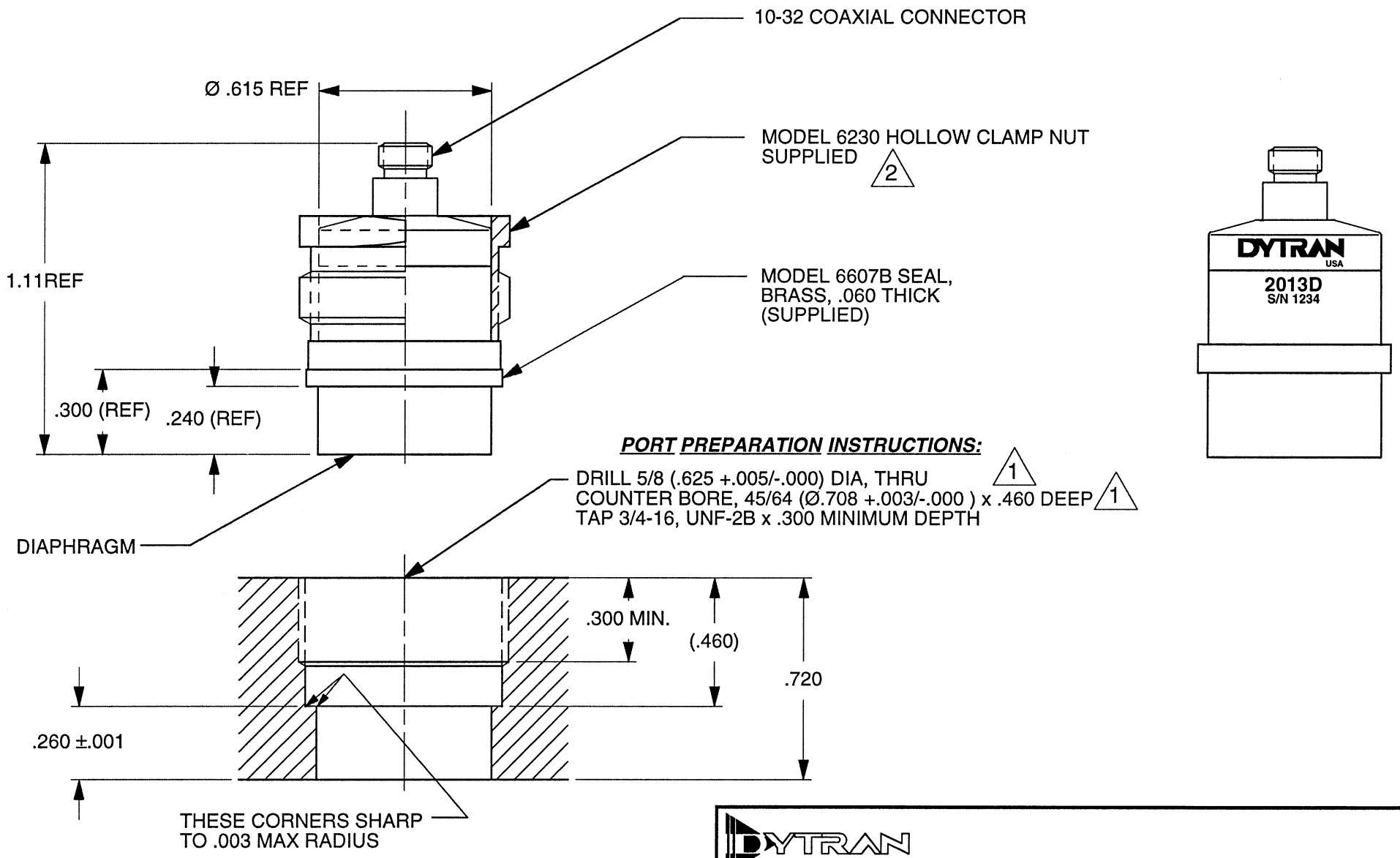

4. BODY/DIAPHRAGM MATERIAL, TITANIUM ALLOY.
3. WEIGHT, LESS CLAMP NUT-35 GRAMS
2. TORQUE ON 6230 CLAMP NUT: 20 LB-IN.
1. THESE DIAMETERS MUST BE CONCENTRIC TO .003 TIR.

DYTRAN INSTRUMENTS, INC.

CHATSWORTH, CA.

SCALE 2X	REV	DATE	ECN		
DATE 6/29/07	PART NO. MODELS 2013D & 2013M10				
DRAWN N.C. / CHECKED	MAT'L				
APPROVED 7-3-07	NEXT ASSEMBLY	USED ON MODELS 2013D & 2013M10			

TITLE: **OUTLINE/INSTALLATION DRAWING MODELS 2013D & 2013M10**

DWG NO. **127-2013D**

SHEET 1 OF 1

Model Number 2013D	PERFORMANCE SPECIFICATION	DOC NO PS2013D
	HIGH INTENSITY IEPE MICROPHONE	REV A, ECN 7426, 05/11/11



- **HIGH INTENSITY**
- **EXCELLENT LINEARITY**
- **HERMETICALLY SEALED**

This family also includes:

Model	Sensitivity (mV/Psi)	Range F.S (psi)	Time Constant (sec)	Operating Temperature (°F)

Refer to the performance specifications of the products in this family for detailed description.

Supplied Accessories:

1) Accredited calibration certificate (ISO 17025)
2) 6230 hollow clamp nut qty 1
3) 6607D delrin seals qty 2

Notes:

[1] 0db reference: 2.9 E-09 psi

[2] Measure using zero-based straight line method, % of F.S. or any lesser range.

[3] Do not apply power to this system without current limting,20 mA MAX.To do so will destroy the IC charge amplifier.

	ENGLISH		SI	
PHYSICAL				
Weight, Max (includes Seal & Hollow Clamp Nut)	0.84	oz	24	grams
Connector, Coaxial, Axially Mounted	10-32, UNF-2A		10-32, UNF-2A	
Mounting Provision: Hollow Clamp Nut	3/4 - 16 THD		3/4 - 16 THD	
Material : Housing / Connector	Titanium		Titanium	
Material : Diaphragm	Titanium		Titanium	
PERFORMANCE				
Sensitivity, ±10% [1]	2	V/Psi	0.29	V/kpa
Range F.S For 5 Volts Out	2.5	Psi	17.23	kpa
Frequency Response, ± 5%	10 - 5000	Hz	10 - 5000	Hz
Absolute Maximum Pressure	20	Psi	138	kpa
Equivalent Electrical Noise (Resolution)	2.5E-05	Psi	1.72E-04	kpa
Linearity [2]	1	% F.S.,Max	1	% F.S.,Max
Mounted Resonant Frequency	> 50	kHz	> 50	kHz
Maximum Raise Time of Input Pulse or Step	5	µ Sec	5	µ Sec
Lower -3db Frequency	0.4	Hz	0.4	Hz
Acceleration Sensitivity, Axial Direction	0.002	Psi /g	0.0014	kpa/m/s^2
ENVIRONMENTAL				
Maximum Vibration	±300	g's,peak	±2943	m/s^2 peak
Maximum Shock	±500	g's,peak	±4905	m/s^2 peak
Temperature Range	-60 to +250	°F	-51 to +121	°C
Thermal Coefficient of Sensitivity	0.03	%°F	0.05	%°C
Seal	Hermetic		Hermetic	
Electrical				
Excitation (Compliance) Voltage Range [3]	+20 to +30	VDC	+20 to +30	VDC
Excitation Current Range	2 to 20	mA	2 to 20	mA
Output Impedence,Nom	150	Ω	150	Ω
Bias Voltage	11 to 13	VDC	11 to 13	VDC
Discharge Time Constant	0.4 to 0.8	Sec	0.4 to 0.8	Sec
Output Signal Polarity For Increasing Pressure	Positive Going		Positive Going	

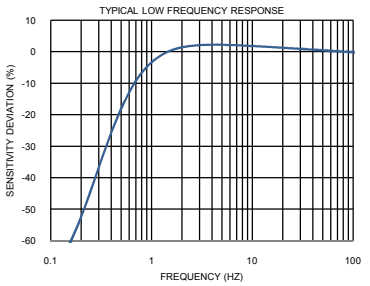

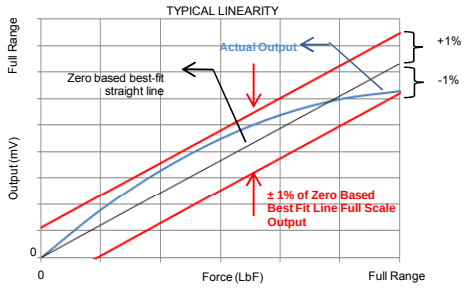

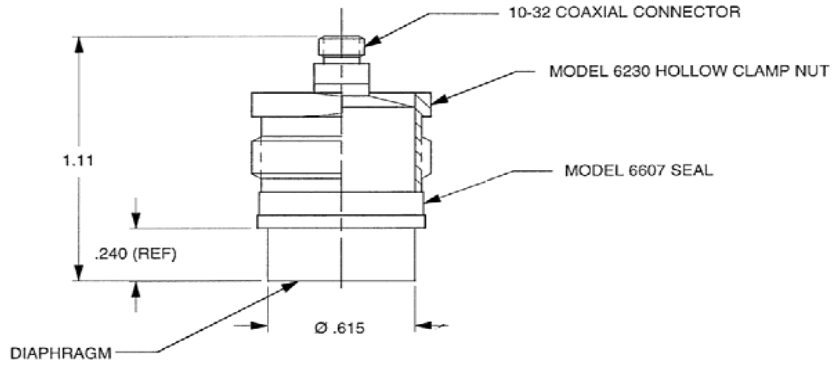

Units on the line drawing are in inches. Refer to 127-2013D for more information.

21592 Marilla Street, Chatsworth, California 91311 Phone: 818.700.7818 Fax:818.700.7880 www.dytran.com
For permission to reprint this content, please contact info@dytran.com

P74.45

ENS LYON

DYTRAN INSTRUMENTS, INC.

Dynamic Transducers and Systems
21592 Marilla St. • Chatsworth, CA 91311 • Phone 818-700-7818
www.dytran.com • e-mail: info@dytran.com

OG2013D.DOC
ORIG. 4-4-07
Rev A, ECN 7426, 05/11/11

OPERATING GUIDE

MODEL 2013D

HIGH INTENSITY LIVM* MICROPHONE

INCLUDED WITH THIS MANUAL:

1) Specifications, Model 2013D
2) Outline/Installation dwg. 127-2013D
3) Outline/Installation dwg. 127-2013-GI
4) Paper. "Low Impedance Voltage Mode (LIVM) Theory and Operation".

* **LIVM** is Dytran's trademark for its line of **L**ow **I**mpedance **V**oltage **M**ode sensors which operate from constant current over two wires. These instruments are compatible with industry standard **IEPE** instruments.

DYTRAN INSTRUMENTS, INC.
Dynamic Transducers and Systems
21592 Marilla St. • Chatsworth, CA 91311 • Phone 818-700-7818
www.dytran.com • e-mail: info@dytran.com

OPERATING GUIDE
MODEL 2013D HIGH INTENSITY MICROPHONE

INTRODUCTION

Model 2013D is a piezoelectric microphone designed to measure high intensity sound pressure levels to 179 db. This instrument utilizes piezoceramic crystals to generate a signal in response to sound pressure acting on the .618 diameter diaphragm.

Within the 2013D housing, the signal generated by the ceramic element is fed to the input of a very low noise miniature JFETcharge amplifier. This amplifier changes the impedance level of the signal to about 150 Ohms and amplifies it to produce a sensitivity of 2 Volts/Psi.

An accelerometer, built as an integral part of the piezo element, nulls out acceleration effects from the mass of diaphragm and end piece and lowers the acceleration sensitivity to less than .002 Psi/g of acceleration in the sensitive axis.

Model 2013D is a hermetically sealed instrument with all joints welded. The electrical connector, a glass-to-metal hermetic design, is a 10-32 coaxial type.

DESCRIPTION

(Refer to Outline/Installation drawing 127-2013D for a physical description of Model 2013D)

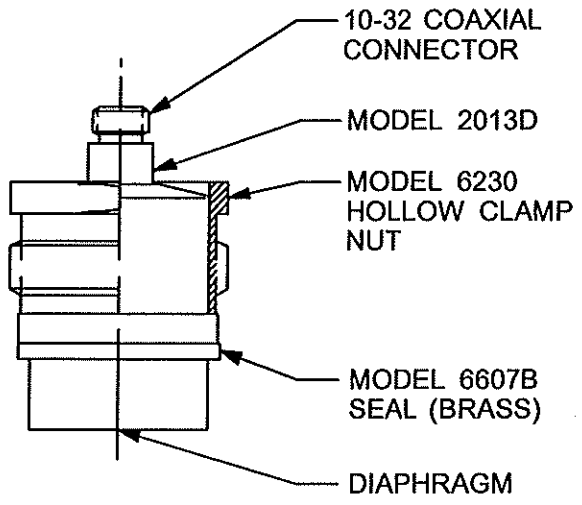

FIGURE 1. MODEL 2013D

Model 2013D is cylindrical in shape with a diaphragm diameter of .615 in. A raised collar is used to secure the instrument into its mounting port. A hollow clamp nut, which slides over the top portion of the body, threads into the mounting port and bears against the top of the raised collar, holding the 2013D firmly in place. A seal (provided), seals the installation against leaks. There are several installation choices provided, one of which provides ground isolation should this be important. More about this detail in the next section, "Installation".

Model 2013D is a Low Impedance Voltage Mode (LIVMor IEPE) design. What this means is that this instrument operates from a constant current type power unit. Within the power unit, a DC power supply applies power to a constant current diode ,or comparable constant circuit, that is connected to the sensor via two wires. The power to the sensor amplifier and the dynamic signal from the sensor are carried on these two wires. In the power unit, the signal is separated from the DC power and is sent to an output jack.

An advantage to this type of system is that the signal can be transported great distances without appreciable degradation. The actual sensitivity of each sensor is provided on a calibration certificate supplied with each instrument.

INSTALLATION

NORMAL INSTALLATION (NOT GROUND ISOLATED)

To install Model 2013D, it is necessary to first decide whether a ground isolated installation is needed. If it is not, refer to outline/installation drawing **127-2013D**. This installation uses one Model 6607B brass seal below the raised body collar bearing against the shoulder on the mounting surface. The hollow clamp nut, (Model 6230) bears against the collar and squeezes the collar and seal against the seal shoulder retaining the sensor. A moderate amount of torque (5-10 Lb-inches) will seal the installation.

DYTRAN INSTRUMENTS, INC.
Dynamic Transducers and Systems
21592 Marilla St. • Chatsworth, CA 91311 • Phone 818-700-7818
www.dytran.com • e-mail: info@dytran.com

GROUND ISOLATED INSTALLATION

If ground isolation is required, i.e., if it is required that the body of the sensor (signal/power ground) be insulated from the mounting surface, refer to outline/installation drawing **127-2013D-GI**.

For this type of installation, two Model 6607D (Delrin) seals are required, one below the raised collar and one above. Also, the body of the 2013D in the area of the hollow clamp nut, is wrapped with Kapton® tape (.003 thick) to insulate the body from the hollow clamp nut. The body of the sensor will be totally electrically isolated from the mounting surface with this installation.

Remember though, that the diaphragm of the sensor is still a part of the sensor and as such, is at sensor ground potential.

MOUNTING PORT PREPARATION

The mounting port must be prepared in accordance with instructions on either of the installation drawings provided. These instructions are listed as "PORT PREPARATION INSTRUCTIONS" on these drawings.

If it is necessary that the diaphragm be flush with the wall of the chamber or test surface, it will be necessary to weld a boss to surfaces thinner than .720 or counterbore surfaces thicker than .720 to attain flush diaphragm installations. Refer to the outline installation drawings.

RECESSED (LONG PASSAGE) INSTALLATIONS

In some installations, it is desirable to recess the diaphragm. In these cases, adjust the depth of the port to attain the desired recess. (See figure 2)

Remember that as the recess gets deeper, the ability to detect high frequencies diminishes due to passage resonance effects. The passage has its own resonant frequency, dependent upon the depth of the recess (passage length) and the speed of sound in the medium under test.

The resonant frequency of the passage is governed by the following equation:

$$f_R = v/4l \quad \text{where:} \quad \text{(Eq 1)}$$

f_R = resonant frequency of the passage, (Hz)
v = velocity of sound in the medium (in/Sec)
(Velocity of sound in air @20° C is 13,200 in/Sec)
l = passage length, measured from the face of the diaphragm to the end of the passage (inches)

As a general rule, the frequency response of your system will be flat to about ± 5% to about 1/3 of the passage resonant frequency as determined by equation 1, above. The shortest rise time (in response to a zero time step function input) is roughly 1/3 of the period of this frequency.

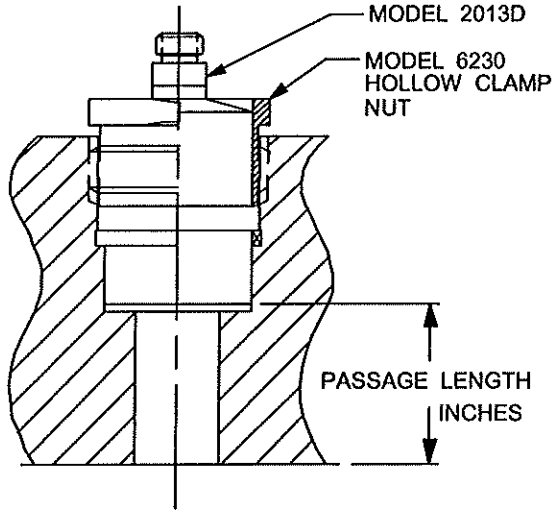

FIGURE 2 RECESSED DIAPHRAGM PASSAGE LENGTH

Using the sound velocity in air @20° C and equation 1, we construct the table shown as figure 3, which relates passage length to resonant frequency and shortest rise time for several passage lengths.

Remember that the values shown in the table, figure 3, are calculated for air @20° C. To calculate values for your particular measurement, substitute into equation 1, the velocity of sound for your medium.

Remember also, that these values will be approximations and are not to be relied upon for absolute accuracy.

DYTRAN INSTRUMENTS, INC.
Dynamic Transducers and Systems
21592 Marilla St. • Chatsworth, CA 91311 • Phone 818-700-7818
www.dytran.com • e-mail: info@dytran.com

RECESS (inches)	NATURAL FREQUENCY (Hz)	APPROX. SHORTEST RISE TIME (µSec)
.001	3.3MHz	0.1
.002	1.6M Hz	0.2
.003	1.1M Hz	0.3
.005	660KHz	0.5
.01	330KHz	1
.05	66KHz	5
.10	33KHz	10
.20	16.5KHz	20
.50	6.6KHz	50
1.00	3.3KHz	100
2.00	1.66KHz	200

FIGURE 3 RESONANT FREQUENCY AND RISE TIME VS. PASSAGE LENGTH

MOUNTING ADAPTORS

Dytran has the capability of designing special mounting adaptors to suit special needs for mounting from various thread forms and sizes to different materials. Discuss your needs with our sales staff and we will be glad to quote on your requirements.

FLASH TEMPERATURE

If you are making a measurement where flash temperature may present a problem, as in field blast testing, it is good practice to recess the diaphragm by .010 and to fill in the recess with an ablative coating such as RTV silicone rubber. Dytran can accomplish this by mounting the sensor in this way in an adaptor or can aid you in accomplishing this type of installation yourself. Contact the sales department for details.

OPERATION

After the 2013D is installed, connect the sensor to the power unit using the appropriate cable (6010AXX, 6011AXX, 6013AXX or 6019AXX).

The choice of specific cable type will depend on what cable connector you need at the power unit end and whether you want low noise or standard cable. Discuss this selection with our sales staff.

Connect the cable to the sensor using the 10-32 end of the cable and snug up the cable nut tightly by hand. Don't use pliers on this cable nut as you may damage the cable or connector.

Connect the other end of the cable to the "Sensor" jack of the Dytran power unit (Models 4102, 4103, 4110, 4114, etc.) and switch the power on.

Allow a minute for the bias voltage to stabilize as the amplifier must charge the ceramic crystals, through a very high value gate resistor, to its quiescent level operating point.

Observe the monitor voltmeter located at the front panel of each of the power units. If the meter reads in the mid-scale region, ("Normal"), this tells you that the cables, accelerometer and power unit are functioning normally and you should be able to proceed with the measurement.

Check for shorts in the cables and connectors if the meter reads in the "Short" region. Check for open cables or connections if the meter reads in the "Open" area. In this manner, the meter becomes a trouble shooting tool for the measurement system.

Connect the other end of the cable to the "Sensor" jack of the Dytran power unit (Models 4102, 4103, 4110, 4114, etc.) and switch the power on.

Observe the monitor voltmeter located at the front panel of each of the power units. This meter reads the DC bias of the internal sensor amplifier. If the meter reads in the mid-scale region, (labeled "Normal"), this tells you that the cables, accelerometer and power unit are functioning normally and you should be able to proceed with the measurement.

Check for shorts in the cables and connectors if the meter reads in the "Short" region. Check for open cables or connections if the meter reads in the "Open" area. In this manner, the meter becomes a trouble shooting tool for the measurement system.

There is more on the use of the monitor meter in the paper, "Low Impedance Voltage Mode (LIVM) Theory and Operation", included with this operating guide.

MAINTENANCE AND REPAIR

Due to the sealed construction of Model 2013D, the only maintenance possible is the cleaning of the electrical connector should it become contaminated.

Should the electrical connector become contaminated with moisture, oil, grease, etc., the entire instrument may be immersed in degreasing solvents to remove the contaminants. After degreasing, place the instrument in a 200° to 250° F oven for one hour to remove all traces of the solvent.

If the instrument must be returned, the service department will issue you a **R**eturned **M**aterials **A**uthorization (**RMA**) number to aid in tracking the repair through the system. Do not send the instrument back without first obtaining an RMA number. At this time you will be advised of the preferred shipping method.

A short note describing the problem, included with the returned instrument, will aid in trouble shooting at the factory and will be appreciated.

We will not proceed with a non-warranty repair without first calling to notify you of the expected charges. There is no charge for evaluation of the unit.

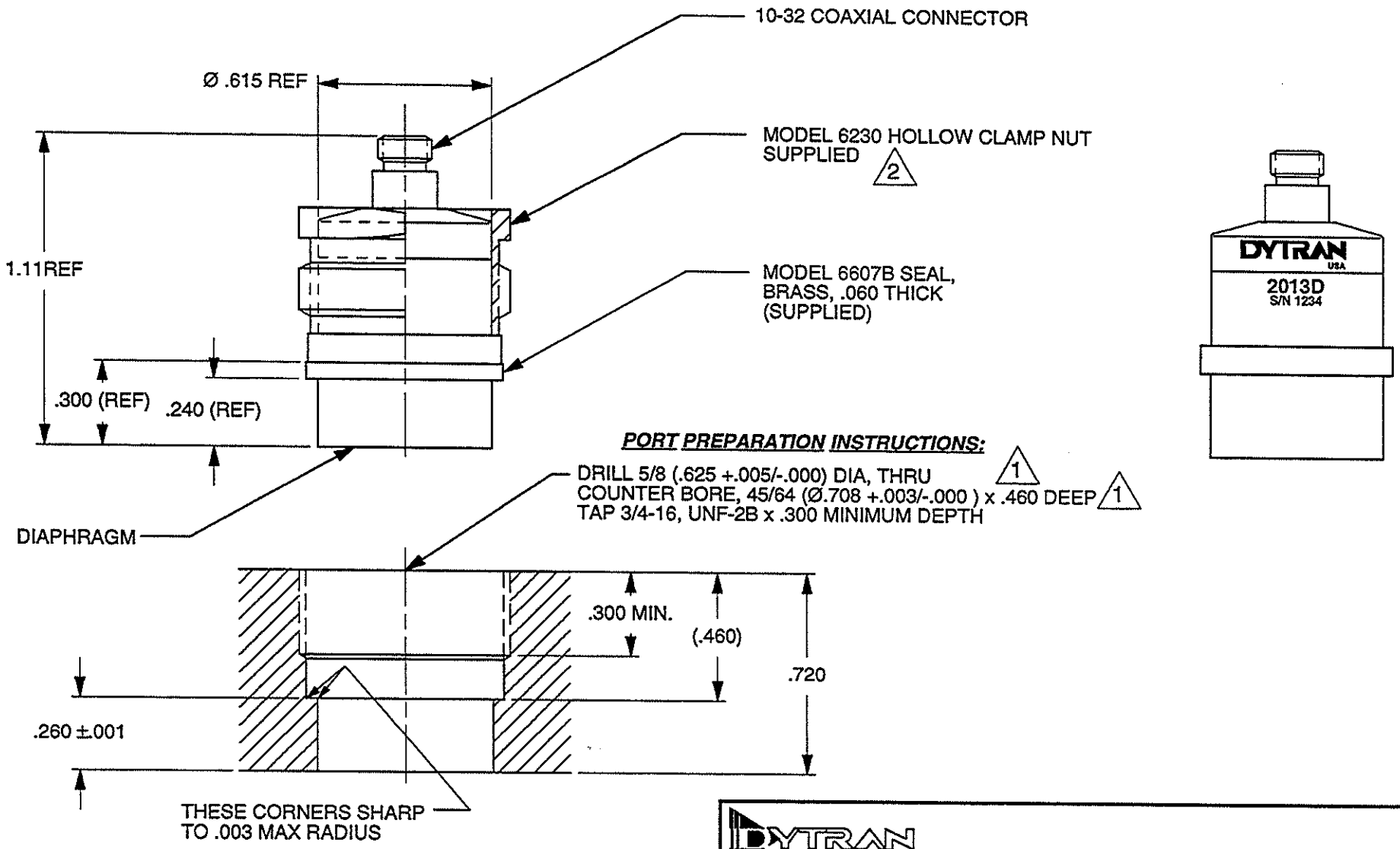

4. BODY/DIAPHRAGM MATERIAL, TITANIUM ALLOY.
3. WEIGHT, LESS CLAMP NUT-35 GRAMS
2. TORQUE ON 6230 CLAMP NUT: 20 LB-IN.
1. THESE DIAMETERS MUST BE CONCENTRIC TO .003 TIR.

DYTRAN INSTRUMENTS, INC.
CHATSWORTH, CA.

SCALE 2X	REV	DATE	ECN		
DATE 6/29/07	PART NO. MODELS 2013D & 2013M10				
DRAWN N.C.	CHECKED	MAT'L			
APPROVED 7-3-07	NEXT ASSEMBLY	USED ON MODELS 2013D & 2013M10			

TITLE: **OUTLINE/INSTALLATION DRAWING MODELS 2013D & 2013M10**

DWG NO. **127-2013D**

SHEET 1 OF 1

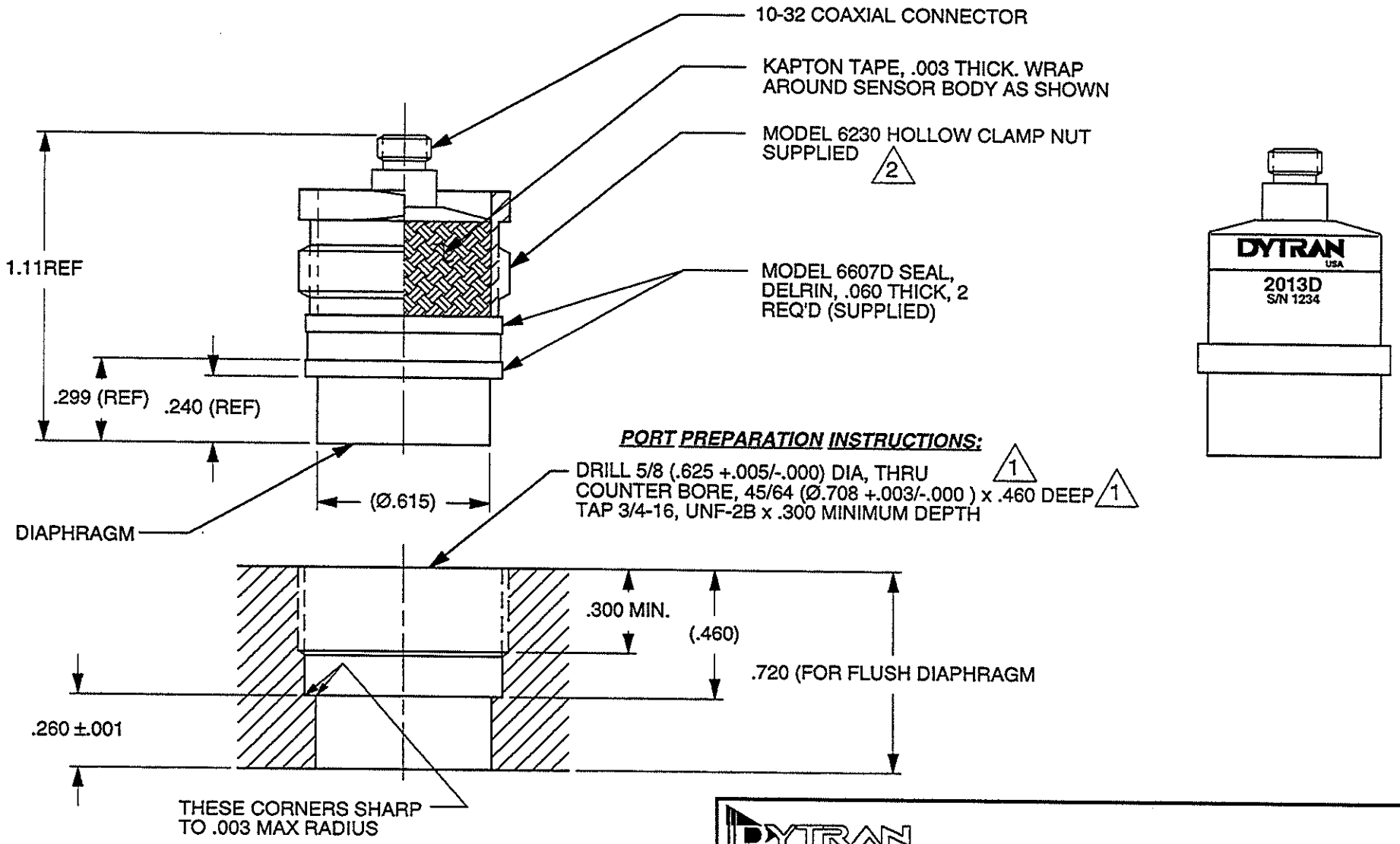

4. BODY/DIAPHRAGM MATERIAL, TITANIUM ALLOY.
3. WEIGHT, LESS CLAMP NUT-35 GRAMS
2. TORQUE ON 6230 CLAMP NUT: 5 LB-IN.
1. THESE DIAMETERS MUST BE CONCENTRIC TO .003 TIR.

DYTRAN INSTRUMENTS, INC.

CHATSWORTH, CA.

SCALE 2X	REV	DATE	ECN		
DATE 7/02/07	PART NO. MODEL 2013D, GND. ISOLATED MOUNT				
DRAWN N.C.	CHECKED	MAT'L			
APPROVED 7-3-07	NEXT ASSEMBLY		USED ON MODEL 2013D		

TITLE
OUTLINE/INSTALLATION DRAWING
MODEL 2013D, GROUND ISOLATED MOUNT

DWG NO. 127-2013D-GI

SHEET 1 OF 1

DYTRAN INSTRUMENTS, INC.
Dynamic Transducers and Systems
21592 Marilla St. • Chatsworth, CA 91311 • Phone 818-700-7818
www.dytran.com • e-mail: info@dytran.com

LOW IMPEDANCE VOLTAGE MODE (LIVM) SYSTEMS, THEORY AND OPERATION

LIVM: WHAT IS IT?

LIVM is Dytran's trademark for our version of Low Impedance Voltage Mode piezoelectric instruments, i.e., piezo instruments with integral-impedance-converting amplifiers operating from constant current supplies over two wires. **LIVM** instruments are entirely compatible the new industry standard **IEPE** designated systems.

LIVM instruments produced at Dytran include force, pressure and acceleration sensors. Each class of sensors is produced in many varieties for a wide range of applications.

Also falling under the class of **LIVM** instruments are in-line charge amplifiers that utilize the same two-wire constant current operating mode as the **LIVM** sensors.

Operating principles for **LIVM** sensors and in-line amplifiers are similar in that they utilize the same two-wire constant current operating mode. The amplifiers built into the sensors are either MOSFET-input voltage or charge amplifiers or JFET-input charge amplifiers.

All types of **LIVM** amplifiers serve to convert the very high impedance of the piezoelectric crystals to much lower impedance voltage signals that have the capability of driving long cables with little or no signal degradation.

THEORY OF OPERATION

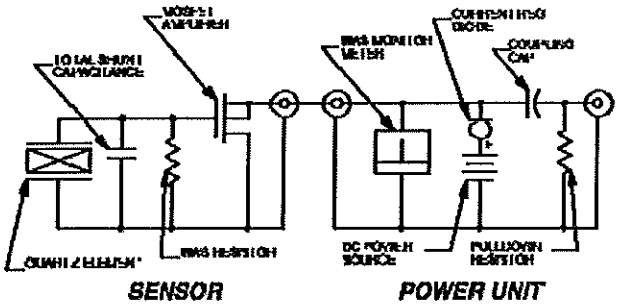

FIGURE 1: TYPICAL LIVM VOLTAGE MODE SYSTEM

Figure 1 is a simplified schematic of a basic LIVM system including the sensor with integral electronics, the cable and the power unit. The sensor amplifier in this case is the unity gain voltage follower. This is the type of amplifier used in most **LIVM** sensors and almost exclusively used with quartz element sensors.

The sensing element (force, pressure or acceleration), usually made with quartz or piezoceramic crystals, is connected directly to the gate of a FET input integrated circuit (IC) amplifier. This amplifier is operated as a source follower and, as such, has unity voltage gain.

The source terminal of the IC is supplied with constant current over the range of 2 to 20 mA at a compliance (supply) voltage of +18 to +30 volts DC. The power unit may take the form of many different configurations from simple battery powered 2 mA units with constant current diode, to line-powered adjustable current power units able to supply 2 to 20 mA of constant current from adjustable constant current circuits.

In either case, the constant current device (current diode or constant current circuit), acts as the source impedance for the unity gain IC built into the sensor or for the in-line charge amplifier.

Under quiescent conditions, the IC will bias itself at approximately +10 volts DC at the input (source) terminal of the sensor. (Some special variations will bias at different voltages depending upon the specific application). This sensor bias voltage is monitored and displayed, on most Dytran power units, and this feature serves as a handy trouble-shooting tool, serving as an indicator for normal or abnormal operation. (More on this topic in a following section, "The fault monitoring monitor as a trouble-shooting tool").

The sensor signal, produced by the measurand acting upon the piezo element, is superimposed upon the sensor bias voltage and appears at the "Sensor" jack of the power unit. At this point, the DC bias portion of the signal is blocked by a coupling capacitor and the AC (signal) portion is coupled directly to the "Output" jack of the power unit.

The Output jack may then be connected directly to the input of readout instruments (oscilloscopes, spectrum analyzers, AC meters, frequency counters, etc.). The very low output impedance of the **LIVM** sensor (about 150 Ohms) makes the effect of most readout instruments on the signal, negligible.

Be aware that the coupling capacitor in the power unit (usually 10 µF) and the impedance of the readout load constitute a high-pass filter that may set the low frequency response of the system below the LF response built into the sensor. In most accelerometer applications, the 10 µF capacitor provides ample time constant to allow vibration measurements down to fractions of a Hz.

Dytran also manufactures DC-coupled power unit for **LIVM** sensors that utilizes an active variable voltage level amplifier circuit to "buck out" the DC bias voltage of the sensor. One such unit, model 4115B, supplies constant current to the sensor and direct-couples the sensor to the output jack eliminating the coupling capacitor. This feature allows the user to take full advantage of the long time constant built into the sensor and precludes the effect of readout instrument load on the low frequency response of the system. Model 4115B is especially useful for very long-duration (quasi-static) measurements especially with force and pressure sensors.

OPERATION, GENERAL

Special note: LIVM sensors depend on the power unit to supply a fixed amount of current to the sensor IC. These IC circuits will absorb any amount of current supplied until they exceed their power rating and burn up. For this reason, never apply power to an **LIVM** sensor without this current limiting protection. This precludes the connection of **LIVM** sensors directly to batteries, DC power units and many types of resistance measuring devices. Never measure the continuity of an LIVM sensor with any type of Ohmmeter. This type of measurement is redundant and may lead to destruction of the sensor. To determine if the IC is intact, use the monitor meter on the front panel of your Dytran power unit. This topic is covered in the following section, "The fault monitoring meter as a trouble-shooting tool".

After installing the sensor in accordance with instructions in the operating guide (manual) supplied with each sensor, connect the sensor to the power unit's "Sensor" jack. This jack, in most cases, is a BNC coaxial connector. You should have been supplied with the proper cable to connect the sensor to the power unit you have selected. If you were not and/or do not have such a cable, contact the factory for help.

It is important to carefully support the sensor cable, especially in situations where there is movement between the sensor and its surroundings. This practice will prolong cable life and will diminish or preclude the effects of triboelectric (cable generated) noise on the signal.

THE FAULT-MONITOR METER: A TROUBLE -SHOOTING TOOL

Most Dytran power units incorporate a dc voltmeter on the front panel that measures the DC bias voltage at the sensor terminal. Measuring this voltage supplies information about the "health" of the measurement system. The three conditions it can identify are 1) normal operation, 2) shorted cable or sensor or faulty power unit and 3) open sensor or cable connection. We will examine each possibility here.

NOTE: The fault-monitor meter may be the LED style shown on the left, Fig. 2, or the D'Arsonval panel meter style shown on the right, Fig. 2.

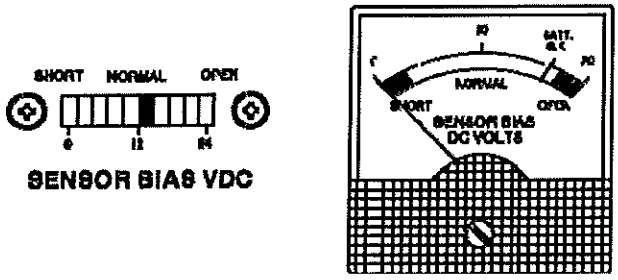

FIGURE 2: TYPICAL FAULT MONITOR METERS

NORMAL OPERATION

Under most normal operating conditions, the monitor meter will indicate approx. mid-scale (+10 to +13 volts DC) when the sensor is connected. Many of the meter faces have a "Normal" area delineated to indicate that the sensor is functioning and the cable from sensor to power unit is neither open nor shorted. It is possible that certain failure modes of the sensor can produce "Normal" indications but these modes are very rare. In most cases, if the meter reads in the "Normal" area, the system is viable.

As a further quick check on normal operation, with some sensors such as pressure and force sensors, pressing on the diaphragm or force sensitive surface with a finger can cause the monitor meter pointer to deflect showing that the sensor is "alive". With some higher sensitivity accelerometers, shaking them by hand can deflect the monitor meter enough to show the sensor is functioning.

OPEN SENSOR OR CABLE (FULL SCALE METER READING)

If the sensor amplifier is blown or the cable connecting sensor to power unit is open, the monitor meter will read in the "OPEN" area of the scale since the current source in the power unit has no load. To check if the problem is in the sensor, disconnect the sensor from its cable (leaving the other end connected to the power unit), and short across the open end of the cable with a metallic object while observing the meter. If the meter does not indicate zero ("short") while the sensor end of the cable is shorted, the cable is open. Replace the cable and try the sensor again, looking for the "Normal" indication.

If the meter reads zero when the short is applied, the cable is OK but the sensor is open. If another sensor is available, try it to verify the finding.

SHORTED SENSOR OR CABLE ("SHORT" METER READING)

If the fault-monitor meter reads in the "Short" area after connecting the sensor, this means that there is a short in the cable or sensor.

This condition cannot damage the power unit since the constant current circuit in the power unit limits the maximum current. Sometimes, shards of metal can scrape off of the cable connector of the 10-32 cables and these may short across the sensor connection. Check for this. Cleaning with a stiff-bristled brush will dislodge such metal shards.

If a short is still indicated, then the problem is with the cable or the power unit. Disconnect the cable from the power unit and observe the meter reading. If the meter reads full scale, the power unit is OK and the problem is a shorted cable or sensor. Replace the cable to verify.

MAINTENANCE AND REPAIR

Because of their small size and sealed construction, field maintenance of **LIVM** sensors is limited to cleaning of connectors and maintenance of mounting surfaces.

Clean connectors with a cloth or paper wipe dipped in solvents such as alcohol, Freon, etc. For hermetically sealed units, acetone may be used also. Acetone is not recommended for non-hermetic units.

Clean epoxy from the mounting surfaces of accelerometers, if necessary, with acetone or other solvents to dissolve and remove epoxies and other adhesives.

If the problem you are having is poor low frequency response and the sensor is not hermetically sealed, baking in a 250° oven for one hour will often get rid of moisture that may have condensed and shorted across the crystals which would shortened the discharge time constant.

If you cannot solve the problem, call the factory for assistance in trouble-shooting the system or for instructions for returning the instrument for evaluation and/or possible repair.

If the instrument is to be returned, you will be issued a Returned Material Authorization (RMA) number by the service department to help speed the instrument through the evaluation process. Do not return an instrument without first contacting the factory.

Dytran Instruments, Inc.
21592 Marilla St. Chatsworth, CA 91311 Ph: 818-700-7818 Fax: 818-700-7880
www.dytran.com email: info@dytran.com

WARRANTY

Dytran Instruments, Inc. warrants its products against defects in materials and workmanship for a period of one year after delivery. During the warranty period, Dytran, at its option, will either repair or replace products which prove to be defective.

WARRANTY LIMITS

1. Improper or inadequate maintenance by the buyer.
2. Unauthorized modification or misuse.
3. Improper installation by the buyer.

EXCLUSIVE REMEDIES

The remedies provided herein are the buyer's sole and exclusive remedies. Dytran shall not be liable for any direct, indirect, special, incidental or consequential tort or any other legal theory. Dytran warrants only the free recalibration of any sensor which deviates beyond its calibrated value within the warranty period.

Contact he factory for return instructions before sending any material for repair.

Dytran Instruments, Inc.
21592 Marilla St. Chatsworth, CA 91311 Ph: 818-700-7818 Fax 818-700-7880
www.dytran.com email: info@dytran.com

CALIBRATION CERTIFICATE
LIVM HIGH INTENSITY MICROPHONE

CUSTOMER:	*ALLIANTECH SAS*				**TEST REPORT #:**	*2295*	*8/16/2013*
PURCHASE ORDER #:	*FB100340*		**SALES ORDER #:**	*160836*	**PROCEDURE:**	*TP2006*	
MODEL:	*2013D*	**SERIAL #:**	*2295*	**TEMP (°C):**	*22*	**HUMIDITY (%):**	*46*
NEW UNIT	X	**RE-CALIBRATION [1]**		**AS RECEIVED CODE**		**AS RETURNED CODE**	
CALIBRATION PERFORMED AT 1000 Hz				**RESOLUTION (dB) [2]:**	*78.7*		
BIAS VOLTAGE (VDC)	*12.6*			**RANGE, F.S. (psi):**	*2.56*	*178.93*	**dB [2]**

SOUND PRESSURE LEVEL (dB)	SENSOR OUTPUT LEVEL (mV)	SENSOR SENSITIVITY (mV/psi)
130	18.49	2009.78
140	55.17	1902.41
150	176.7	1920.65
160	565.80	1951.03

TEST EQUIPMENT LIST - CALIBRATION STATION # 7

DII #	MANUFACTURER	MODEL	SERIAL #	DESCRIPTION	CAL DATE	DUE DATE
017	*NICOLET*	*310*	*IAQ9406710*	*DIGITAL OSCILLOSCOPE*	*06/07/12*	*09/07/13*
1113	*DYTRAN INST.*	*2013D*	*2232*	*MICROPHONE*	*09/07/12*	*09/07/13*
1439	*FLUKE*	*8808A*	*475791*	*MULTIMETER*	*10/10/12*	*10/10/13*

[1] AS RECEIVED / AS RETURNED CODES:
1 = IN TOLERANCE, NO ADJUSTMENTS
2 = IN TOLERANCE, BUT ADJUSTED
3 = OUT OF TOLERANCE < 5%
4 = OUT OF TOLERANCE > 5%
5 = REPAIR REQUIRED
6 = REPAIRED AND CALIBRATED
7 = UNIT NON-REPAIRABLE, RECOMMEND REPLACEMENT
8 = UNIT SERVICEABLE WITH CURRENT CALIBRATION DATA

[2] ZERO dB REFERENCE = .0002 DYNE / CM^2 OR 2.9 X 10^{-9} PSI.
THIS CALIBRATION WAS PERFORMED PER MIL-STD-45662A, ANSI/NCSL Z540-1-1994, ISO 10012-1 WITH A NIST TRACEABLE NUMBER OF: 822/270212-04, D1209 - ESTIMATED UNCERTAINTY OF CALIBRATION: 2.5%.
THIS CERTIFICATE SHALL NOT BE REPRODUCED EXCEPT IN FULL, WITHOUT THE WRITTEN PERMISSION FROM DYTRAN INSTRUMENTS, INC.

CALIBRATION TECHNICIAN: *HUNG LE*	**TEST DATE:** *08/16/13*
	RECALL DATE: *08/16/14*

Dytran Instruments, Inc.
21592 Marilla St. Chatsworth, CA 91311 Ph: 818-700-7818 Fax 818-700-7880
www.dytran.com email: info@dytran.com

CALIBRATION CERTIFICATE
LIVM HIGH INTENSITY MICROPHONE

CUSTOMER:	*ALLIANTECH SAS*				**TEST REPORT #:**	*2295*	*8/16/2013*
PURCHASE ORDER #:	*FB100340*		**SALES ORDER #:**	*160836*	**PROCEDURE:**	*TP2006*	
MODEL:	*2013D*	**SERIAL #:**	*2295*	**TEMP (°C):**	*22*	**HUMIDITY (%):**	*46*
NEW UNIT	X	**RE-CALIBRATION [1]**		**AS RECEIVED CODE**		**AS RETURNED CODE**	
CALIBRATION PERFORMED AT 1000 Hz				**RESOLUTION (dB) [2]:**	*78.7*		
BIAS VOLTAGE (VDC)	*12.6*			**RANGE, F.S. (psi):**	*2.56*	*178.93*	**dB [2]**

SOUND PRESSURE LEVEL (dB)	SENSOR OUTPUT LEVEL (mV)	SENSOR SENSITIVITY (mV/psi)
130	18.49	2009.78
140	55.17	1902.41
150	176.7	1920.65
160	565.80	1951.03

TEST EQUIPMENT LIST - CALIBRATION STATION # 7

DII #	MANUFACTURER	MODEL	SERIAL #	DESCRIPTION	CAL DATE	DUE DATE
017	*NICOLET*	*310*	*IAQ9406710*	*DIGITAL OSCILLOSCOPE*	*06/07/12*	*09/07/13*
1113	*DYTRAN INST.*	*2013D*	*2232*	*MICROPHONE*	*09/07/12*	*09/07/13*
1439	*FLUKE*	*8808A*	*475791*	*MULTIMETER*	*10/10/12*	*10/10/13*

[1] AS RECEIVED / AS RETURNED CODES:

1 = IN TOLERANCE, NO ADJUSTMENTS
2 = IN TOLERANCE, BUT ADJUSTED
3 = OUT OF TOLERANCE < 5%
4 = OUT OF TOLERANCE > 5%
5 = REPAIR REQUIRED
6 = REPAIRED AND CALIBRATED
7 = UNIT NON-REPAIRABLE, RECOMMEND REPLACEMENT
8 = UNIT SERVICEABLE WITH CURRENT CALIBRATION DATA

[2] ZERO dB REFERENCE = .0002 DYNE / CM^2 OR 2.9 X 10^{-9} PSI.

THIS CALIBRATION WAS PERFORMED PER MIL-STD-45662A, ANSI/NCSL Z540-1-1994, ISO 10012-1 WITH A NIST TRACEABLE NUMBER OF: 822/270212-04, D1209 - ESTIMATED UNCERTAINTY OF CALIBRATION: 2.5%.

THIS CERTIFICATE SHALL NOT BE REPRODUCED EXCEPT IN FULL, WITHOUT THE WRITTEN PERMISSION FROM DYTRAN INSTRUMENTS, INC.

CALIBRATION TECHNICIAN: *HUNG LE*	**TEST DATE:** *08/16/13*
	RECALL DATE: *08/16/14*

Dytran Instruments, Inc.
21592 Marilla St. Chatsworth, CA 91311 Ph: 818-700-7818 Fax 818-700-7880
www.dytran.com email: info@dytran.com

CALIBRATION CERTIFICATE
LIVM HIGH INTENSITY MICROPHONE

CUSTOMER:	*ALLIANTECH SAS*				**TEST REPORT #:**	*2296*	*8/16/2013*
PURCHASE ORDER #:	*FB100340*		**SALES ORDER #:**	*160836*	**PROCEDURE:**	*TP2006*	
MODEL:	*2013D*	**SERIAL #:**	*2296*	**TEMP (°C):**	*22*	**HUMIDITY (%):**	*46*
NEW UNIT	X	**RE-CALIBRATION [1]**		**AS RECEIVED CODE**		**AS RETURNED CODE**	
CALIBRATION PERFORMED AT 1000 Hz				**RESOLUTION (dB) [2]:**	*78.7*		
BIAS VOLTAGE (VDC)	*12.3*			**RANGE, F.S. (psi):**	*2.54*	*178.85*	**dB [2]**

SOUND PRESSURE LEVEL (dB)	SENSOR OUTPUT LEVEL (mV)	SENSOR SENSITIVITY (mV/psi)
130	18.78	2041.30
140	55.63	1918.28
150	178.25	1937.50
160	570.50	1967.24

TEST EQUIPMENT LIST - CALIBRATION STATION # 7

DII #	MANUFACTURER	MODEL	SERIAL #	DESCRIPTION	CAL DATE	DUE DATE
017	*NICOLET*	*310*	*IAQ9406710*	*DIGITAL OSCILLOSCOPE*	*06/07/12*	*09/07/13*
1113	*DYTRAN INST.*	*2013D*	*2232*	*MICROPHONE*	*09/07/12*	*09/07/13*
1439	*FLUKE*	*8808A*	*475791*	*MULTIMETER*	*10/10/12*	*10/10/13*

[1] AS RECEIVED / AS RETURNED CODES:
1 = IN TOLERANCE, NO ADJUSTMENTS
2 = IN TOLERANCE, BUT ADJUSTED
3 = OUT OF TOLERANCE < 5%
4 = OUT OF TOLERANCE > 5%
5 = REPAIR REQUIRED
6 = REPAIRED AND CALIBRATED
7 = UNIT NON-REPAIRABLE, RECOMMEND REPLACEMENT
8 = UNIT SERVICEABLE WITH CURRENT CALIBRATION DATA

[2] ZERO dB REFERENCE = .0002 DYNE / CM^2 OR 2.9 X 10^{-9} PSI.
THIS CALIBRATION WAS PERFORMED PER MIL-STD-45662A, ANSI/NCSL Z540-1-1994, ISO 10012-1 WITH A NIST TRACEABLE NUMBER OF: 822/270212-04, D1209 - ESTIMATED UNCERTAINTY OF CALIBRATION: 2.5%.
THIS CERTIFICATE SHALL NOT BE REPRODUCED EXCEPT IN FULL, WITHOUT THE WRITTEN PERMISSION FROM DYTRAN INSTRUMENTS, INC.

CALIBRATION TECHNICIAN: *HUNG LE*	4 CAL	**TEST DATE:** *08/16/13*
		RECALL DATE: *08/16/14*